User Guide

ThinkPad USB 3.0 Ultra Dock and ThinkPad USB 3.0 Pro Dock

 http://www.lenovo.com/safety

Note: Before installing the product, be sure to read the warranty information in Appendix B “Lenovo Limited Warranty” on page 41.

Second Edition (June 2015)

© Copyright Lenovo 2015.

LIMITED AND RESTRICTED RIGHTS NOTICE: If data or software is delivered pursuant a General Services Administration “GSA” contract, use, reproduction, or disclosure is subject to restrictions set forth in Contract No. GS-35F-05925.

Contents

Chapter 1. ThinkPad USB 3.0 Ultra Dock 1
About the ultra dock 1
Product description 1
Main features 1
Locating the controls 1
System requirements 3
Installing the ultra dock 4
Installing the device driver on Windows operating systems 4
Connecting the ultra dock to your notebook computer 4
Uninstalling the device driver from Windows operating systems 6
Hanging up the ultra dock 7
Using the ultra dock 7
Using the headset and microphone combo connector 7
Using the Gigabit Ethernet connector 8
Using the USB connectors 8
Using the DP output connector 8
Using the HDMI output connector 8
Working with the ultra dock. 9
Understanding the video output modes 9
Working with the ultra dock utility 11
Supported resolutions and refresh rates . . . 13
Troubleshooting 16

Chapter 2. ThinkPad USB 3.0 Pro Dock 19
About the pro dock 19
Product description 19
Main features 20
Locating the controls 21
System requirements 22
Installing the pro dock. 23
Installing the device driver on Windows operating systems 23
Connecting the pro dock to your notebook computer 23
Uninstalling the device driver from Windows operating systems 25
Hanging up the pro dock 26
Using the pro dock 26
Using the headset and microphone combo connector 26
Using the Gigabit Ethernet connector 27
Using the USB connectors 27
Using the DP output connector 27
Using the DVI-I video output connectors. . . 27
Working with the pro dock 28
Understanding the video output modes . . . 28
Working with the pro dock utility 30
Supported resolutions and refresh rates . . . 33
Troubleshooting 35

Appendix A. Service and Support . . . 39
Online technical support 39
Telephone technical support 39
Accessibility information 39

Appendix B. Lenovo Limited Warranty 41
Part 1 - General Terms 41
Part 2 - Country-specific Terms 43
Part 3 - Warranty Service Information 46
Suplemento de Garantía para México. 47

Appendix C. Electronic emission notices 49
Federal Communications Commission Declaration of Conformity 49

Appendix D. Notices 53
Recycling information 53
Recycling information for China 53
Recycling information for Brazil 54
Important WEEE information 54
Export Classification Notice 54
Trademarks 54

Appendix E. Restriction of Hazardous Substances Directive (RoHS) 57
European Union RoHS 57
China RoHS. 57
Turkish RoHS 57
Ukraine RoHS 57
India RoHS 58

© Copyright Lenovo 2015

Chapter 1. ThinkPad USB 3.0 Ultra Dock

This chapter contains product information for the ThinkPad® USB 3.0 Ultra Dock (hereafter called ultra dock).

About the ultra dock

This section contains product description, main features, locations of controls, and system requirements for the ultra dock.

Product description

The ultra dock is a portable expansion module that enables you to easily connect your notebook computer to the Ethernet and multiple devices, such as a headset, a microphone, and USB devices.

Your option package includes the following:

- ThinkPad USB 3.0 Ultra Dock
- Power adapter
- Power cord
- 1-meter (39.37-inch) USB 3.0 cable
- Warranty poster

Contact your place of purchase if any item is missing or damaged. Be sure to retain your proof of purchase and packing material. They might be required to receive warranty service.

Main features

- USB connectors: four USB 3.0 connectors and two USB 2.0 connectors
- Network connection: Gigabit Ethernet speed
- Supported external monitors: DisplayPort® (DP) monitor and High Definition Multimedia Interface (HDMI™) monitor

Maximum resolutions and refresh rates

1. DP output only: 3840 x 2160 pixels (30 Hz)
2. HDMI output only: 2560 x 1440 pixels (50 Hz)
3. DP and HDMI simultaneous output: 2048 x 1152 pixels (60 Hz)

For more information, go to “Supported resolutions and refresh rates” on page 13.

You can set up your work area by connecting your notebook computer to the ultra dock with the provided USB 3.0 cable, connecting multiple devices to the ultra dock, and setting the ultra dock on your notebook computer; then, you are ready to use the multiple devices each time you connect your notebook computer to the ultra dock.

Locating the controls

The following figure shows the locations of controls on the ultra dock.

© Copyright Lenovo 2015

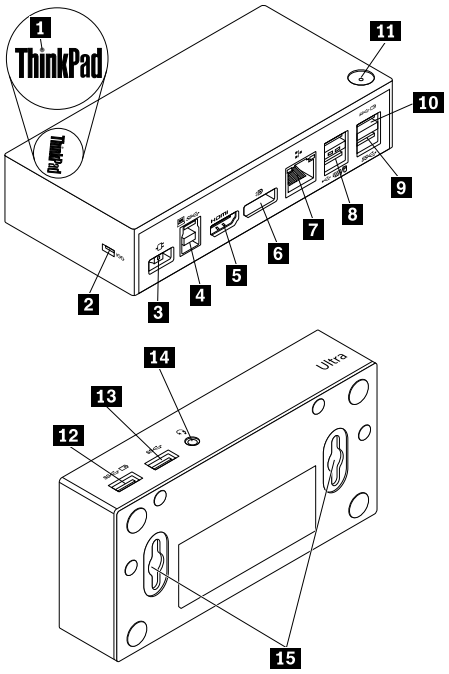

Figure 1. Overview of the ultra dock

1 Power and connection indicator	Used to indicate whether the ultra dock is powered on normally.
2 Security-lock slot	Used to secure the ultra dock through a security cable lock.
3 Power connector	Used to connect the power adapter.
4 USB 3.0 upstream connector	Used to connect a notebook computer.
5 HDMI output connector	Used to connect an external monitor with an HDMI cable.
6 DP output connector	Used to connect an external monitor with a DP cable.
7 Gigabit Ethernet connector	Used to connect a local area network (LAN) cable.
8 USB 2.0 connectors	Used to connect USB 2.0 devices, such as a USB keyboard, a USB mouse, a USB speaker, or a USB printer. **Notes:** 1. It is recommended that you connect a USB keyboard and a USB mouse to the connectors. 2. If you are using a USB 3.0 device, it is recommended that you connect it to a USB 3.0 connector rather than USB 2.0 connector for faster USB transmission speed.
9 USB 3.0 connector	Used to connect USB 3.0 devices, such as a USB scanner, a USB speaker, or a USB printer.
10 Always On USB 3.0 connector (SS)	Used to connect USB 3.0 devices and charge some mobile digital devices and smartphones.
11 Power button	Used to turn on or turn off the ultra dock.
12 Always On USB 3.0 connector (SS)	Used to connect USB 3.0 devices and charge some mobile digital devices and smartphones.
13 USB 3.0 connector	Used to connect USB 3.0 devices, such as a USB scanner, a USB speaker, or a USB printer.

14 Headset and microphone combo connector	Used to connect a microphone, a headset, or a speaker.
15 VESA® mounting hole	Used to fix the ultra dock on the ThinkCentre® Tiny L-Bracket Mounting Kit or on the wall.

System requirements

Before using the ultra dock, ensure that your notebook computer meets the following general requirements:

- Microsoft® Windows® 7 (32 bit or 64 bit)
- Microsoft Windows 8.1 (32 bit or 64 bit)
- Microsoft Windows 10 (32 bit or 64 bit)
- Windows Media Player (WMP), CyberLink PowerDVD™, and Corel® WinDVD®
- High performance of the battery power plan
- A device driver

For more information about the device driver, go to “Installing the device driver on Windows operating systems” on page 4.

For DP output only, HDMI output only, and DP / HDMI simultaneous output, ensure that your notebook computer also meets the following requirements:

- The system requirements for a 3840 x 2160 resolution with DP single output are as follows:

Minimum requirements (for viewing documents and Web sites)	Recommended requirements (for full-screen video playback)
Processor: Intel® Core™ i5 or i7 2+GHz / AMD® Trinity or better **Memory:** 4 GB **Video Card:** Intel HD 4000, ATI Radeon HD7xxx, NVIDIA® GeForcel® 5xxM or better **USB:** USB 2.0 but USB 3.0 recommended	**Processor:** Intel Core i7 2+GHz / AMD Richland A 10–575x / AMD Kaveri A 10–7400P or better **Memory:** 8 GB **Video Card:** Intel HD 4000, ATI Radeon HD 8650, NVIDIA GeForce 7xxM or better **USB:** USB 3.0 **Disk:** 7200 round per minit (RPM) of Hard Disk Drive (HDD) or Solid-State Drive(SSD) **Note:** If you play the video file with the resolution of 3840 x 2160 pixels, the system must be capable of decoding the video file in the Graphic Processing Unit (GPU).

- The system requirements for a 2560 x 1440 resolution with HDMI output only are as follows:

Minimum requirements (for viewing documents and Web sites)	Recommended requirements (for full-screen video playback)
Processor: Intel Core i5 or i7 2+GHz / AMD Llano or better **Memory:** 4 GB Video Card: Intel GMA x 4500 / 36 x 0, ATI Radeon HD3xxx, NVIDIA GeForce 9xxxx or better **USB:** USB 2.0 but USB 3.0 recommended	**Processor:** Intel Core i5 or i7 2+GHz / AMD Llano or better **Memory:** 8 GB Video Card: Intel GMA x 4500 / 36 x 0, ATI Radeon HD3xxx, NVIDIA GeForce 9xxxx or better **USB:** USB 3.0

- The system requirements for a 2048 x 1152 resolution with DP and HDMI simultaneous output are as follows:

Minimum requirements (for viewing documents and Web sites)	Recommended requirements (for full-screen video playback)
Processor: 1.4 Ghz Intel Core2 Duo / AMD Turion™ 64 x 2 or better* **Memory:** 2 GB **Video Card:** Any supported GPU released after September 2009.	**Processor:**2.4 Ghz Intel Core2 Duo / AMD Turion II or better* **Memory:** 2 GB **Video Card:** Intel HD 3000, ATI Radeon HD3xxx, NVIDIA GeForce 9xxx or better.

* Any Intel Core2Quad, i3, i5, i7, AMD Phenom, Fusion (Llano, Trinity & Richland), or Jaguar (Temash & Kabini) meets the processor requirements.

Installing the ultra dock

This section provides information on how to connect the ultra dock to your notebook computer, how to install and uninstall the device driver, and how to hang up the ultra dock.

Installing the device driver on Windows operating systems

To install the device driver on the Windows 7, Windows 8.1, or Windows 10 operating system, do the following:

1. Go to http://www.lenovo.com/support/docks and select **ThinkPad USB 3.0 Ultra Dock**.
2. Locate and download the installation file for the device driver.
3. Double-click the installation file, and then follow the instructions on the screen to complete the installation.
4. Restart your computer after the completion message is displayed.

After you have installed the device driver, you can connect the ultra dock to your notebook computer.

Connecting the ultra dock to your notebook computer

This section provides information on how to connect the ultra dock to your notebook computer with the provided power adapter, power cord, and USB 3.0 cable.

Note: Install the device driver before you connect the ultra dock to your notebook computer.

To connect the ultra dock to your notebook computer, do the following:

1. Connect the power adapter to the power cord.
2. Connect the power plug of the power cord to an electrical outlet.

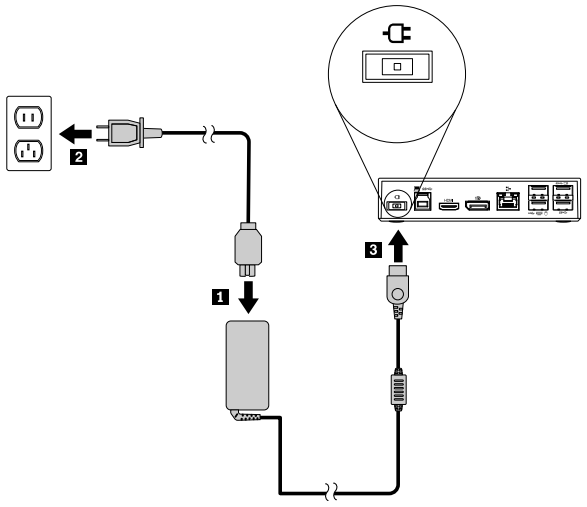

Figure 2. Connecting the power adapter to the power cord

3. Connect the dc-in connector of the power adapter to the ultra dock. The ultra dock is powered on automatically. To power off the ultra dock, press the power button of the ultra dock.

   Notes:

   a. When the ultra dock is power supplied, the ultra dock is powered on automatically and the power and connection indicator is on. Press the power button of the ultra dock to power off the ultra dock.

   b. Be sure to correctly connect the ultra dock to the power supply. If the ultra dock is not powered on, you will not be able to use the ultra dock.

4. Connect the USB plug 1 of the USB 3.0 cable to the USB 3.0 upstream connector on the ultra dock.
5. Connect the USB plug 2 of the USB 3.0 cable to an available USB 3.0 connector on the notebook computer. The system will automatically identify and configure the ultra dock. The video output function of the ultra dock will be automatically enabled after the configuration is completed.

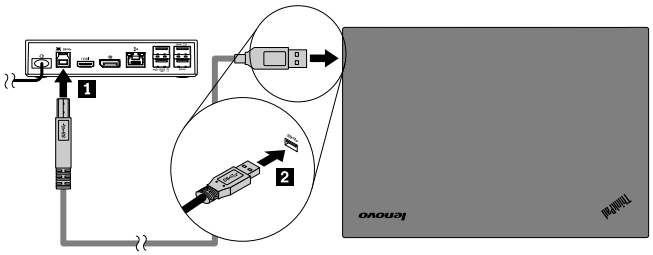

Figure 3. Connecting the ultra dock to the power supply and notebook computer

Notes:

- The ultra dock will not supply power to the notebook computer during the time when it is connected to the notebook computer.
- Connecting the ultra dock to any connector other than a USB 3.0 connector or using any USB cable other than a USB 3.0 cable might impact on the ultra dock performance, especially the video playback, and Ethernet performance. However, the supported maximum resolution will not be reduced.

Uninstalling the device driver from Windows operating systems

This section provides instructions on how to uninstall the device driver from Windows operating systems.

To uninstall the device driver from the Windows 7, Windows 8.1, or Windows 10 operating system, do the following:

For the Windows 7 operating system:

1. Exit all applications that use the pro dock.
2. Click **Start → All Programs → Lenovo USB Display → Uninstall**.
3. Follow the instructions on the screen to uninstall the device driver.
4. If necessary, restart your computer.

For the Windows 8.1 operating system:

1. Go to Control Panel by doing one of the following:
   - From the desktop, move the pointer to the top-right or bottom-right corner of the screen to display the charms, and then click **Settings → Control Panel**.
   - From the Start screen, do the following:
     a. Click the arrow icon in the bottom-left corner of the screen to go to the Apps screen.
     b. Scroll to the right side, and click **Control Panel** in the **Windows System** section.
2. Depending on your Control Panel mode, do one of the following:
   - Click the **Uninstall a program** option under the **Programs** menu.
   - Click **Programs and Features**.
3. Select the **Lenovo USB Display** and then right-click your mouse. The **Uninstall** option is displayed.
4. Click **Uninstall**.
5. Follow the instructions on the screen to uninstall the device driver.

For the Windows 10 operating system:

1. From the desktop, move the pointer to bottom-left corner of the screen, and then search **Control Panel** in the search box.
2. Depending on your Control Panel mode, do one of the following:
   - Click the **Uninstall a program** option under the **Programs** menu.
   - Click **Programs and Features**.
3. Select the **Lenovo USB Display** and then right-click your mouse. The **Uninstall** option is displayed.
4. Click **Uninstall**.
5. Follow the instructions on the screen to uninstall the device driver.

Hanging up the ultra dock

When you work with a ThinkPad notebook computer, an ultra dock, and an external monitor together, you can choose to hang up the ultra dock on the ThinkCentre Tiny L-Bracket Mounting Kit (hereafter called L Bracket). It saves space from your work area in this way.

For more information about the L Bracket and the supported monitor, go to www.lenovo.com/support/stands.

Align the VESA mounting holes in the ultra dock with the corresponding two screws on the L bracket. Then install the ultra dock onto the L bracket vertically as shown.

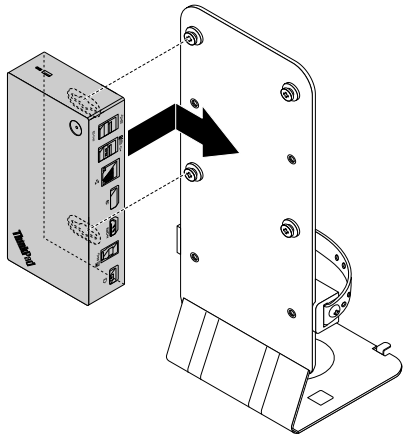

Figure 4. Hanging up the ultra dock on the L Bracket

You can also install the ultra dock on the VESA screws on the wall in the similar way.

Using the ultra dock

This section provides information on how to use the headset and microphone combo jack, Gigabit Ethernet connector, DP output connector, HDMI video output connector, USB connectors on the ultra dock

The ultra dock expands the connection capability of your notebook computer. You can connect devices to the appropriate connectors on the ultra dock while your notebook computer is started. Normally it will take several seconds for the notebook computer to recognize new devices.

The ultra dock simplifies the connection between your notebook computer and multiple devices. For example, you can connect the USB devices and external monitors to the ultra dock rather than the notebook computer. When you want to take your notebook computer away, you can disconnect the notebook computer from the ultra dock rather than remove the USB devices and external monitors. When you come back, simply connect your notebook computer to the ultra dock to resume all previous connections and start working at once.

Using the headset and microphone combo connector

The headset and microphone combo connector on the ultra dock is a 3.5 mm microphone combined stereo line-out connector. It works for the standard 3.5 mm headset, microphone, or speaker.

To use the headset and microphone combo connector on the ultra dock, connect your headset, microphone, or speaker to the headset and microphone combo connector.

Note: The headset and microphone combo connector on the ultra dock are automatically enabled when you have successfully connected the ultra dock to your notebook computer and installed the device driver. However, if you cannot hear anything from the headset connected to the headset and microphone combo connector on the ultra dock, you can manually enable the headset and microphone combo connector on the ultra dock. See “Manually setting the playback device and recording device” on page 11 for more information.

Using the Gigabit Ethernet connector

To use the Gigabit Ethernet connector on the ultra dock, connect the ultra dock to standard 10 Mbps, 100 Mbps, or 1000 Mbps network, and wait until the ultra dock is fully configured by the Windows operating system.

The Gigabit Ethernet connection on the ultra dock fully supports the ThinkVantage® Access Connections program.

There are two indicators on the top of the Gigabit Ethernet connector.

Working status	Indicator activity
The ultra dock connects to the Ethernet successfully.	The right indicator stays on in green.
The ultra dock is transferring data.	The left indicator keeps flashing in amber.

Using the USB connectors

To use the USB 2.0 connectors, connect a USB 2.0 device such as the mouse or keyboard to the USB 2.0 connectors on the ultra dock. To use the USB 3.0 connectors, connect a USB 3.0 device to the USB 3.0 connector on the ultra dock.

When the USB device is correctly connected to a USB connector on the ultra dock, an information window will be displayed in the Windows notification area, indicating that the USB device has been connected to the computer.

Using the Always On USB 3.0 connectors

By default, the Always-on USB 3.0 connector (SS) enables you to charge some mobile digital devices and smartphones when your computer is in the following situation:

- When your computer is on or in sleep mode
- When your computer is in hibernation mode or is turned off
- When the ultra dock is disconnected from your computer

It can supply power up to 2.4 A during the charging process. When you press the power button to turn off the ultra dock, the ultra dock stops power supply.

Using the DP output connector

You can connect one external monitor to the ultra dock by using the DP output connector.

Using the HDMI output connector

You can connect one external monitor to the ultra dock by using the HDMI output connector.

Working with the ultra dock

This section provides information about the video output function of the ultra dock and instructions on how to work with the ultra dock utility, which enables you to configure the ultra dock to your needs.

Understanding the video output modes

In the Windows 7 or Windows 8.1 operating system, the ultra dock works in the following three video output modes:

- “Extend mode” on page 9
- “Mirror mode” on page 10
- “Single-display mode” on page 10

By default, the ultra dock works in extend mode. The first time you connect the ultra dock to your notebook computer, the resolution of your notebook computer and the connected monitor will be changed to the default. You can configure your resolution to your needs.

For the Windows 10 operating system:

1. Right-click the **ThinkPad USB 3.0 Ultra Dock** icon  in the Windows notification area. A pop-up window opens.
2. Select **Video Setup**. The Setting window opens.
3. In the **Multiple displays** drop-down list box, select one of the options to set your display output.

Extend mode

When the ultra dock is in extend mode, it splits your display across two monitors.

There are three options when you are using extend mode:

- **Extend:** When you select this option, your notebook computer monitor becomes the primary display and the external monitor becomes the secondary display. By default, the external monitor display is on the right side of the notebook computer monitor display.
- **Extend To:** When you select this option, your notebook computer monitor becomes the primary display and the external monitor becomes the secondary display. You can give the monitor its own frame buffer through the submenu options **Right**, **Left**, **Above**, and **Below** or through drag operations. The display space is a continuous area; therefore, windows and objects can be moved between different displays.
- **Set as Main Monitor:** When you select this option, the external monitor becomes the primary display and the notebook computer monitor becomes the secondary display.

In extend mode, you can drag and drop windows from one display to the other. You also can increase your productivity by doing the following:

- Reading e-mails on one display and opening attachments on the other
- Expanding a spreadsheet across two displays
- Increasing your work area by putting all the palette and toolbars on the other display when you are doing graphics editing
- Keeping the desktop on one display and watching videos on the other

To enter extend mode, do the following:

1. Click the **ThinkPad USB 3.0 Ultra Dock** icon  in the Windows notification area. A pop-up window opens.
2. Select **ThinkPad USB 3.0 Ultra Dock**, and then select one from the following:
   - **Extend**
   - **Extend To**
   - **Set as Main Monitor**

To exit extend mode, do the following:

1. Click the **ThinkPad USB 3.0 Ultra Dock** icon  in the Windows notification area. A pop-up window opens.
2. Select **ThinkPad USB 3.0 Ultra Dock → Off**.

Mirror mode

When the ultra dock is in mirror mode, it clones your notebook computer screen to the external monitor. the ultra dock automatically selects the settings (screen resolution, color quality, and refresh rate) for the external monitor, which achieves optimal resolution based on your notebook computer.

To enter mirror mode, do the following:

1. Click the **ThinkPad USB 3.0 Ultra Dock** icon  in the Windows notification area. A pop-up window opens.
2. Select **ThinkPad USB 3.0 Ultra Dock → Mirror**.

To exit mirror mode, do the following:

1. Click the **ThinkPad USB 3.0 Ultra Dock** icon  in the Windows notification area. A pop-up window opens.
2. Select **ThinkPad USB 3.0 Ultra Dock → Off**.

Single-display mode

When the ultra dock is in single-display mode, it enables you to show your desktop on only one screen.

There are two options when you are using single-display mode:

- **Notebook Monitor Off:** When you select this option, the display of your notebook computer monitor turns off and the display of the external monitor turns on.
- **Off:** When you select this option, the display of the external monitor turns off and the display of your notebook computer monitor turns on. However, other functions such as audio, Ethernet, and USB connection can still work though the display is off.

To enter single-display mode, do the following:

1. Click the **ThinkPad USB 3.0 Ultra Dock** icon  in the Windows notification area. A pop-up window opens.
2. Select **ThinkPad USB 3.0 Ultra Dock → Notebook Monitor Off** or **Off**.

To exit single-display mode, do the following:

1. Click the **ThinkPad USB 3.0 Ultra Dock** icon  in the Windows notification area. A pop-up window opens.
2. Select **ThinkPad USB 3.0 Ultra Dock**, and then select another mode as you want.

Working with the ultra dock utility

The ultra dock utility enables you to configure the display settings of the ultra dock.

Note: The settings you have configured for the ultra dock will be retained each time when you connect the notebook computer to the ultra dock. This feature enables you to use your notebook computer with multiple docks. For example, if you use a notebook computer both at home and at work, you can set up both work areas with docks. Then, you just connect your notebook computer to the ultra dock at either location, and you are ready to work.

Manually setting the playback device and recording device

By default, the Lenovo notebook computers use the headset and microphone combo connector on the ultra dock and disable built-in audio connectors when the ultra dock is connected.

To manually set the playback device and recording device on the ultra dock, do the following:

For the Windows 7 operating system:

1. Click the **ThinkPad USB 3.0 Ultra Dock** icon  in the Windows notification area. A pop-up window opens.
2. Select **Audio Setup**. The Sound and Audio Devices Properties window opens.
3. Click the **Audio** tab.
4. Select a Lenovo USB audio device or other audio device from the **Sound playback** panel, and then select a Lenovo USB audio device or other audio device from the **Sound recording** panel.
5. Click **OK**.

For the Windows 8.1 operating system:

1. Click the **ThinkPad USB 3.0 Ultra Dock** icon  in the Windows notification area. A pop-up window opens.
2. Select **Audio Setup**. The Sound window opens.
3. On the **Playback** tab, select a USB audio line-out device. On the **Recording** tab, select a USB audio line-in device.
4. Click **OK**.

For the Windows 10 operating system:

1. Right-click the **ThinkPad USB 3.0 Ultra Dock** icon  in the Windows notification area. A pop-up window opens.
2. Select **Audio Setup**. The Sound window opens.
3. On the **Playback** tab, select a USB audio line-out device. On the **Recording** tab, select a USB audio line-in device.
4. Click **OK**.

Rotating the external monitor display

The ultra dock enables you to rotate only your external monitor display as you want.

For the Windows 7 or Windows 8.1 operating system:

To rotate the external monitor display, do the following:

1. Click the **ThinkPad USB 3.0 Ultra Dock** icon  in the Windows notification area. A pop-up window opens.
2. Select **ThinkPad USB 3.0 Ultra Dock → Screen Rotation**, and then select one of the following options:
   - **Normal**: The external monitor display remains the same as your notebook computer monitor display.
   - **Rotated Left**: The external monitor display rotates 90 degrees to the left.
   - **Rotated Right**: The external monitor display rotates 90 degrees to the right.
   - **Upside-Down**: The external monitor display becomes upside-down.

Note: For a normal display, you can continually click **Rotated Left** or **Rotated Right** until the display becomes upside-down.

For the Windows 10 operating system:

1. Right-click the **ThinkPad USB 3.0 Ultra Dock** icon  in the Windows notification area. A pop-up window opens.
2. Select **Video Setup**. The Setting window opens.
3. In the **Orientation** drop-down list box, select one of the following options:
   - **Landscape**: The external monitor display remains the same as your notebook computer monitor display.
   - **Portrait**: The external monitor display rotates 90 degrees to the left.
   - **Landscape (flipped)**: The external monitor display becomes upside-down.
   - **Portrait (flipped)**: The external monitor display rotates 90 degrees to the right.
4. Follow the instructions on the screen to complete the setting.

Setting the resolution of the external monitor

The ultra dock enables you to set the resolution of the external monitor.

In extend mode and single-display mode, you can set the resolution of the external monitor by doing the following:

1. Click the **ThinkPad USB 3.0 Ultra Dock** icon  in the Windows notification area. A pop-up window opens.
2. Select **ThinkPad USB 3.0 Ultra Dock → Screen Resolution**, and then select the desired screen resolution option for the external monitor. For example, “2048 x 1152” means that the video output resolution will be 2048 by 1152 pixels.

In mirror mode, you can set the resolution of the external monitor by doing the following:

1. Click the **ThinkPad USB 3.0 Ultra Dock** icon  in the Windows notification area. A pop-up window opens.
2. Select **Video Setup**. A window opens.
3. In the **Resolution** drop-down list box, move the slider up to increase or down to decrease the resolution of the external monitor.

For the Windows 10 operating system:

1. Right-click the **ThinkPad USB 3.0 Ultra Dock** icon  in the Windows notification area. A pop-up window opens.
2. Select **Video Setup**. The Setting window opens.
3. On the right pane of the window, scroll down the slide bar to the end.
4. Click **Advanced display settings**.
5. In the **Resolution** drop-down list box, set the resolution of the external monitor.

Switching video output modes

For the Windows 7 or Windows 8.1 operating system:

To switch from one video output to another, do the following:

1. Click the **ThinkPad USB 3.0 Ultra Dock** icon  in the Windows notification area. A pop-up window opens.
2. Select **ThinkPad USB 3.0 Ultra Dock**, and then select the video output mode as you want.

For more information about the video output modes, refer to “Understanding the video output modes” on page 9.

Supported resolutions and refresh rates

The following tables list the refresh rates supported at various resolutions for the ultra dock video output.

Table 1. Supported resolutions and refresh rates: DP output only

Resolution	Refresh rate (Unit: Hz)
640 x 480	60, 67, 72, 75, 85
720 x 400	70, 85, 88

Table 1. Supported resolutions and refresh rates: DP output only (continued)

Resolution	Refresh rate (Unit: Hz)
720 x 480	50, 60
768 x 576	50, 60
800 x 600	56, 60, 72, 75, 85
832 x 624	75
800 x 480	60
848 x 480	60
1024 x 600	60
1024 x 768	60, 70, 75, 85
1152 x 864	75
1152 x 870	75
1280 x 720	50, 60
1280 x 768	60, 75, 85
1280 x 800	60
1280 x 960	60, 85
1280 x 1024	60, 75
1360 x 768	60
1366 x 768	50, 60
1368 x 768	60
1400 x 1050	60, 75, 85
1440 x 900	60
1600 x 900	60
1600 x 1200	60
1680 x 1050	60
1920 x 1080	50, 60
1920 x 1200	60
2048 x 1080	60
2048 x 1152	60
2048 x 1280	60
2048 x 1536	60
2560 x 1440	50, 60
2560 x 1600	60
3840 x 2160	30

Notes:

1. Resolution refers to the number of pixels horizontally and vertically displayed on the screen.
2. Refresh rate (also called vertical frequency) measures the speed that the entire screen is rescanned.

Table 2. Supported resolutions and refresh rates: HDMI output only

Resolution	Refresh rate (Unit: Hz)
640 x 480	60, 67, 72, 75, 85
720 x 400	70, 85, 88
720 x 480	50, 60
768 x 576	50, 60
800 x 600	56, 60, 72, 75, 85
832 x 624	75
800 x 480	60
848 x 480	60
1024 x 600	60
1024 x 768	60, 70, 75, 85
1152 x 864	75
1152 x 870	75
1280 x 720	50, 60
1280 x 768	60, 75, 85
1280 x 800	60
1280 x 960	60, 85
1280 x 1024	60, 75
1360 x 768	60
1366 x 768	50, 60
1368 x 768	60
1400 x 1050	60, 75, 85
1440 x 900	60
1600 x 900	60
1600 x 1200	60
1680 x 1050	60
1920 x 1080	50, 60
1920 x 1200	60
2048 x 1080	60
2048 x 1152	60
2048 x 1280	60
2048 x 1536	60
2560 x 1440	50

Table 3. Supported resolutions and refresh rates: DP and HDMI simultaneous output

Resolution	Refresh rate (Unit: Hz)
640 x 480	60, 67, 72, 75, 85
720 x 400	70, 85, 88
720 x 480	50, 60

Table 3. Supported resolutions and refresh rates: DP and HDMI simultaneous output (continued)

Resolution	Refresh rate (Unit: Hz)
768 x 576	50, 60
800 x 600	56, 60, 72, 75, 85
832 x 624	75
800 x 480	60
848 x 480	60
1024 x 600	60
1024 x 768	60, 70, 75, 85
1152 x 864	75
1152 x 870	75
1280 x 720	50, 60
1280 x 768	60, 75, 85
1280 x 800	60
1280 x 960	60, 85
1280 x 1024	60, 75
1360 x 768	60
1366 x 768	50, 60
1368 x 768	60
1400 x 1050	60, 75, 85
1440 x 900	60
1600 x 900	60
1600 x 1200	60
1680 x 1050	60
1920 x 1080	50, 60
1920 x 1200	60
2048 x 1080	60
2048 x 1152	60

Troubleshooting

This chapter provides some troubleshooting hints and tips to assist you if you experience any problems with the ultra dock. Check the following items first to try to solve the problem.

General

1. **The ThinkPad USB 3.0 Ultra Dock icon is not displayed on the screen.**

   The **ThinkPad USB 3.0 Ultra Dock** icon is displayed only when an external monitor is connected to the ultra dock. If an external monitor is connected, ensure that the video cable is fully inserted into the ultra dock and the monitor.

2. **The power and connection indicator of the ultra dock is not on.**

   Ensure that you have correctly connected the power adapter to the ultra dock and a working electrical outlet, and that you have pressed the power button. Do not use any power adapter other than the one provided with the ultra dock.

3. **You connect the ultra dock to a computer with the provided USB 3.0 cable, but the ultra dock does not work.**
   a. Ensure that the ultra dock is well powered by its power adapter. the ultra dock always needs external power adapter for operation, because it does not take power from the USB connector attached to your notebook computer.
   b. Ensure that the device driver of the ultra dock is well installed; if not, install the device driver and restart the computer.
   c. Ensure that the USB connector on your computer works well; if not, replace with other USB connectors.
4. **The 2.4 GHz wireless keyboard or 2.4 GHz wireless mouse function is interrupted. The mouse pointer lags or it cannot move. Some characters are lost when you input by the keyboard.**

   It is recommended that you connect your 2.4 GHz device receiver to the front USB 3.0 connector on the ultra dock and avoid connecting another USB 3.0 device next to the connector with the receiver attached.
5. **When you connect your device (such as a mobile phone) to the dock for charging, the charging speed becomes slow.**

   Ensure that you connect your mobile phone to the Always On USB 3.0 connector. Disconnect the ultra dock from the computer, the charging speed may become faster.
6. **The mobile phones or other USB devices cannot be charged when connected to the Always On USB 3.0 connector.**

   It is recommended that you can disconnect the ultra dock from the notebook computer and then you can charge the mobile phones or other USB devices.
7. **Your mouse and keyboard cannot wake up your computer system when connected to the Always On USB 3.0 connector.**

   It is recommended that your mouse or keyboard is connected to the other USB connector.

Video output

1. **The external monitor display is blank.**
   - Ensure that the notebook computer connected to the ultra dock is running correctly and is not in standby or hibernation mode. When the notebook computer is in standby or hibernation mode, the external monitor display is always blank.
   - Ensure that the device driver is installed following the installation instructions and the icon for the ultra dock is visible in the Windows notification area.
   - Ensure that the following connections are correct:
     - The connection between the USB 3.0 cable and your notebook computer
     - The connection between the USB 3.0 cable and the ultra dock
     - The connection among the power adapter, the ultra dock, and the electrical outlet
     - The connection between your video cable to the ultra dock and the external monitor.
   - If the problem persists, disconnect all connections of the ultra dock, and uninstall the ultra dock device driver. Then, reinstall the device driver and the ultra dock.

2. **You cannot play back videos on the external monitor but can play them back on the notebook computer monitor.**

   Some notebook computers do not support the Certified Output Protection Protocol (COPP), and you will not be able to play back the protected videos on the external monitor connected to the ultra dock. The Corel WinDVD 10 program also has limitations on playing back videos in the Windows XP operating system.

   To play back videos on the external monitor, you can connect the external monitor to the HDMI or DP connector on your notebook computer, and extend the display to the external monitor. For more information about configuring the display settings, see “Working with the ultra dock utility” on page 11.

3. **The images on the external monitor flutter.**

   Check the display resolution setting of the notebook computer and ensure that the resolution is supported by the ultra dock.

4. **The images on the external monitor is not in correct colors.**

   Check the display resolution setting of the computer and ensure that the resolution is supported by the ultra dock.

5. **The computer can play back Web flashes. However, when you drag the window to the external monitor and maximize the playback window, the playback stops.**

   To solve the problem, update your Adobe Flash Player to the latest version.

6. **The video files cannot be played smoothly on the external monitor with a configured resolution of 3840 x 2160 pixels (30 Hz).**

   The ultra dock supports the videos with a frame rate slower than or equal to 24 frames per second (fps). It consumes the notebook computer resource a lot when you play the video on the external monitor with a configured resolution of 3840 x 2160 pixels (30 Hz). For more information about the recommended system requirements, go to “System requirements” on page 3. The video with a frame rate faster than 24 fps may not be able to be played smoothly. You can downgrade the resolution of your external monitor to achieve better performance.

Audio

You cannot hear anything through your notebook computer speakers or you cannot use the audio connectors on the notebook computer.

By default, ThinkPad and other Lenovo notebook computers use the headset and microphone combo connector on the ultra dock and disable built-in audio connectors when the ultra dock is connected.

To enable the built-in audio connectors on your notebook computer, do the following:

1. Right-click the **Volume** icon in the Windows notification area.
2. Select **Sounds**, and the Sound window is displayed.
3. Click the **Playback** tab to select a built-in audio device, and then click the **Recording** tab to select another built-in audio device.
4. On the **Playback** tab, select a built-in audio device. On the **Recording** tab, select another built-in audio device.

See “Manually setting the playback device and recording device” on page 11 for more information.

Notes:

1. To apply the new settings, restart the applications that are using the audio devices.
2. The settings you have adjusted will be saved until you change the settings next time.

Chapter 2. ThinkPad USB 3.0 Pro Dock

This chapter contains the product information for the ThinkPad USB 3.0 Pro Dock (hereafter called pro dock).

About the pro dock

This section contains the product description, main features, locations of controls, and system requirements for the pro dock

Product description

The pro dock is a portable expansion module that enables you to easily connect your notebook computer to the Ethernet and multiple devices, such as a headset, a microphone, and Universal Serial Bus (USB) devices.

Your option package includes the following:

- ThinkPad USB 3.0 Pro Dock
- Power adapter
- Power cord
- 1-meter (39.37-inch) USB 3.0 cable
- DVI-I to VGA adapter
- Warranty poster

Contact your place of purchase if any item is missing or damaged. Be sure to retain your proof of purchase and packing material. They might be required to receive warranty service.

© Copyright Lenovo 2015

Main features

- USB connectors: three USB 3.0 connectors and two USB 2.0 connectors
- Network connection: Gigabit Ethernet speed
- Supported external monitors: DP monitor, Digital Visual Interface - Integrated (DVI-I) monitor, and Video Graphics Array (VGA) monitor (requires an additional DVI-I to VGA adapter)

Maximum resolutions and refresh rates

1. DP output only: 2560 x 1600 pixels (60 Hz)
2. DVI-I output only or VGA output only: 2048 x 1152 pixels (60 Hz)
3. DVI-I / DP simultaneous output or VGA / DP simultaneous output: 2048 x 1152 pixels (60 Hz)

For more information, go to “Supported resolutions and refresh rates” on page 33.

You can set up your work area by connecting your notebook computer to the pro dock with the provided USB 3.0 cable, connecting multiple devices to the pro dock, and setting the pro dock on your notebook computer; then, you are ready to use the multiple devices each time you connect your notebook computer to the pro dock.

Locating the controls

The following figure shows the locations of controls on the pro dock.

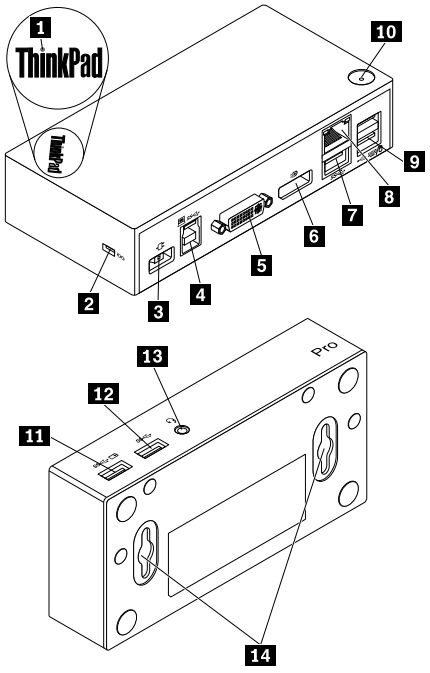

Figure 5. Overview of the pro dock

1 Power and connection indicator	Used to indicate whether the pro dock is powered on normally.
2 Security-lock slot	Used to secure the pro dock through a security cable lock.
3 Power connector	Used to connect the power adapter.
4 USB 3.0 upstream connector	Used to connect a notebook computer.
5 DVI-I video output connector	Used to connect an external monitor with a DVI cable. You also can connect a DVI-I to VGA adapter to the DVI-I video output connector, and connect the external monitor with a VGA cable to the DVI-I to VGA adapter.
6 DP output connector	Used to connect an external monitor with a DP cable.
7 USB 3.0 connector	Used to connect USB 3.0 devices, such as a USB scanner, a USB speaker, or a USB printer.
8 Gigabit Ethernet connector	Used to connect a local area network (LAN) cable.
9 USB 2.0 connectors	Used to connect USB 2.0 devices, such as a USB keyboard, a USB mouse, a USB speaker, or a USB printer. **Notes:** 1. It is recommended that you connect a USB keyboard and a USB mouse to the connectors. 2. If you are using a USB 3.0 device, it is recommended that you connect it to a USB 3.0 connector rather than USB 2.0 connector for faster USB transmission speed.
10 Power button	Used to turn on or turn off the pro dock.
11 Always On USB 3.0 connector (SS)	Used to connect USB 3.0 devices and charge some mobile digital devices and smartphones.

12 USB 3.0 connector	Used to connect USB 3.0 devices, such as a USB scanner, a USB speaker, or a USB printer.
13 Headset and microphone combo connector	Used to connect a microphone, a headset, or a speaker.
14 VESA mounting hole	Used to fix the pro dock on the L Bracket or on the wall.

System requirements

Before using the pro dock, ensure that your notebook computer meets the following general requirements:

- Microsoft Windows 7 (32 bit or 64 bit)
- Microsoft Windows 8.1 (32 bit or 64 bit)
- Microsoft Windows 10 (32 bit or 64 bit)
- Windows Media Player (WMP), CyberLink PowerDVD, and Corel WinDVD
- High performance of the battery power plan
- A device driver

For more information about the device driver, go to “Installing the device driver on Windows operating systems” on page 23

For DP output only, DVI-I or VGA output only, DP/DVI-I simultaneous output and DP/VGA simultaneous output, ensure that your notebook computer also meets the following requirements:

- The system requirements for a 2048 x 1152 resolution with DVI-I output only or VGA output only are as follows:

Minimum requirements (for viewing documents and Web sites)	**Recommended requirements (for full-screen video playback)**
Processor: 1.4 Ghz Intel Core2 Duo / AMD Turion 64 x 2 or better* **Memory:** 2 GB **Video Card:** Any supported GPU released after September 2009.	**Processor:** 2.4 Ghz Intel Core2 Duo / AMD Turion II or better* **Memory:** 2 GB **Video Card:** Intel HD 3000, ATI Radeon HD3xxx, NVIDIA GeForce 9xxx or better.

* Any Intel Core2Quad, i3, i5, i7, AMD Phenom, Fusion (Llano, Trinity & Richland), or Jaguar (Temash & Kabini) meets the processor requirements.

- The system requirements for a 2560 x 1440 or 2560 x 1600 resolution with DP output only are as follows:

Minimum requirements (for viewing documents and Web sites)	**Recommended requirements (for full-screen video playback)**
Processor: Intel Core i5 or i7 2+GHz / AMD Llano or better **Memory:** 4 GB Video Card: Intel GMA x 4500 / 36 x 0, ATI Radeon HD3xxx, NVIDIA GeForce 9xxxx or better **USB:** USB 2.0 but USB 3.0 recommended	**Processor:** Intel Core i5 or i7 2+GHz / AMD Llano or better **Memory:** 8 GB Video Card: Intel GMA x 4500 / 36 x 0, ATI Radeon HD3xxx, NVIDIA GeForce 9xxxx or better **USB:** USB 3.0

- The system requirements for a 2048 x 1152 resolution with DP / VGA simultaneous output and DP / DVI-I simultaneous output are as follows:

Minimum requirements (for viewing documents and Web sites)	Recommended requirements (for full-screen video playback)
Overall WEI Score: 3.0 or better **Processor:** 2.4 GHz Intel Core2 Guo / AMD Turion II or better* **Memory:** 2 GB **Video Card:** Intel GMA x 4500 / 36 x 0, ATI Radeon HD3xxx, NVIDIA GeForce 9xxx or better	**Overall WEI Score:** 6.0 or better **Processor:** Intel Core i5 or i7 2 + GHz / AMD Turion II or better* **Memory:** 4 GB **Video Card:** Intel HD 4000, ATI Radeon HD5/6xxx, NVIDIA GeForce 4xxM or better

* Any Intel Core2Quad, i3, i5, i7, AMD Phenom, Fusion (Llano, Trinity & Richland), or Jaguar (Temash & Kabini) meets the processor requirements.

Installing the pro dock

This section provides information on how to connect the pro dock to your notebook computer, how to install and uninstall the device driver, and how to hang up the pro dock.

Installing the device driver on Windows operating systems

To install the device driver on the Windows 7, Windows 8.1, or Windows 10 operating system, do the following:

1. Go to http://www.lenovo.com/support/docks and select **ThinkPad USB 3.0 Pro Dock**.
2. Locate and download the installation file for the device driver.
3. Double-click the installation file, and then follow the instructions on the screen to complete the installation.
4. Restart your computer after the completion message is displayed. The system will automatically identify and configure the pro dock. The video output function of the pro dock will be automatically enabled after the configuration is completed.

After you have installed the device driver, you can connect the pro dock to your notebook computer.

Connecting the pro dock to your notebook computer

This section provides information on how to connect the pro dock to your notebook computer with the provided power adapter, power cord, and USB 3.0 cable.

Note: Install the device driver before you connect the pro dock to your notebook computer.

To connect the pro dock to your notebook computer, do the following:

1. Connect the power adapter to the power cord.
2. Connect the power plug of the power cord to an electrical outlet.

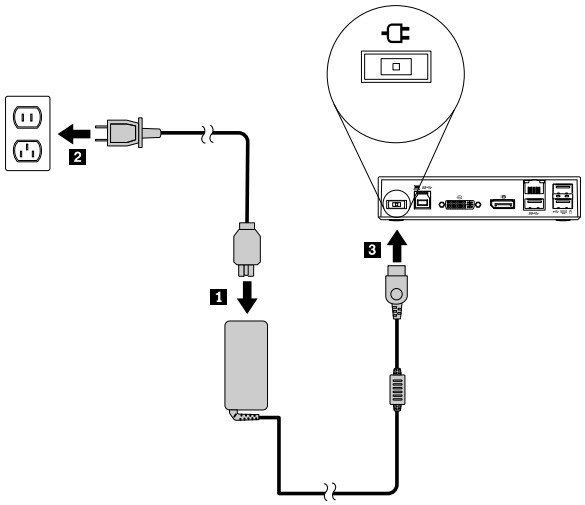

Figure 6. Connecting the power adapter to the power cord

3. Connect the dc-in connector of the power adapter to the pro dock. The pro dock is powered on automatically. To power off the pro dock, press the power button of the pro dock.

   Notes:

   a. When the pro dock is power supplied, the pro dock is powered on automatically and the power and connection indicator is on. Press the power button of the pro dock to power off the pro dock.

   b. Be sure to correctly connect the pro dock to the power supply. If the pro dock is not powered on, you will not be able to use the pro dock.

4. Connect the USB plug 1 of the USB 3.0 cable to the USB 3.0 upstream connector on the pro dock.
5. Connect the USB plug 2 of the USB 3.0 cable to an available USB 3.0 connector on the notebook computer. The system will automatically identify and configure the pro dock. The video output function of the pro dock will be automatically enabled after the configuration is completed.

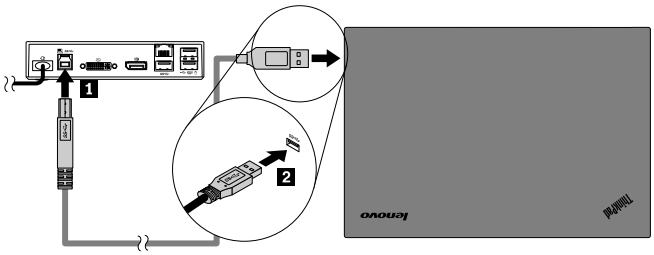

Figure 7. Connecting the pro dock to the power supply and notebook computer

Notes:

- The pro dock will not supply power to the notebook computer during the time when it is connected to the notebook computer.
- Connecting the pro dock to any connector other than a USB 3.0 connector or using any USB cable other than a USB 3.0 cable might impact on the pro dock performance, especially the video playback and Ethernet performance. However, the supported maximum resolution will not be reduced.

Uninstalling the device driver from Windows operating systems

This section provides instructions on how to uninstall the device driver from Windows operating systems.

To uninstall the device driver from the Windows 7, Windows 8.1, or Windows 10 operating system, do the following:

For the Windows 7 operating system:

1. Exit all applications that use the pro dock.
2. Click **Start → All Programs → Lenovo USB Display → Uninstall**.
3. Follow the instructions on the screen to uninstall the device driver.
4. If necessary, restart your computer.

For the Windows 8.1 operating system:

1. Go to Control Panel by doing one of the following:
   - From the desktop, move the pointer to the top-right or bottom-right corner of the screen to display the charms, and then click **Settings → Control Panel**.
   - From the Start screen, do the following:
     a. Click the arrow icon in the bottom-left corner of the screen to go to the Apps screen.
     b. Scroll to the right side, and click **Control Panel** in the **Windows System** section.
2. Depending on your Control Panel mode, do one of the following:
   - Click the **Uninstall a program** option under the **Programs** menu.
   - Click **Programs and Features**.
3. Select the **Lenovo USB Display** and then right-click your mouse. The **Uninstall** option is displayed.
4. Click **Uninstall**.
5. Follow the instructions on the screen to uninstall the device driver.

For the Windows 10 operating system:

1. From the desktop, move the pointer to bottom-left corner of the screen, and then search **Control Panel** in the search box.
2. Depending on your Control Panel mode, do one of the following:
   - Click the **Uninstall a program** option under the **Programs** menu.
   - Click **Programs and Features**.
3. Select the **Lenovo USB Display** and then right-click your mouse. The **Uninstall** option is displayed.
4. Click **Uninstall**.
5. Follow the instructions on the screen to uninstall the device driver.

Hanging up the pro dock

When you work with a ThinkPad notebook computer, a pro dock, and an external monitor together, you can choose to hang up the pro dock on the ThinkCentre Tiny L-Bracket Mounting Kit (hereafter called L Bracket). It saves space from your work area in this way.

For more information about the L Bracket and the supported monitor, go to www.lenovo.com/support/stands.

Align the VESA mounting holes in the pro dock with the corresponding two screws on the L bracket. Then install the pro dock onto the L bracket vertically as shown.

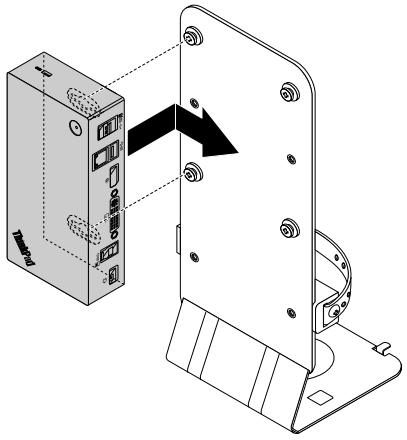

Figure 8. Hanging up the pro dock on the L Bracket

You can also install the pro dock on the VESA screws on the wall in the similar way.

Using the pro dock

This section provides information on how to use the headset and microphone combo jack, Gigabit Ethernet connector, DP output connector, DVI-I video output connector, USB connectors on the pro dock.

The pro dock expands the connection capability of your notebook computer. You can connect devices to the appropriate connectors on the pro dock while your notebook computer is started. Normally it will take several seconds for the notebook computer to recognize new devices.

The pro dock simplifies the connection between your notebook computer and the USB devices or the external monitors. You can connect the USB devices and external monitors to the pro dock rather than the notebook computer. When you want to take your notebook computer away, you can disconnect the notebook computer from the pro dock rather than remove the USB devices and external monitors. When you come back, simply connect your notebook computer to the pro dock to resume all previous connections and start working at once.

Using the headset and microphone combo connector

The headset and microphone combo connector on the pro dock is a 3.5 mm microphone combined stereo line-out connector. It works for the standard 3.5 mm headset, microphone, or speaker.

To use the headset and microphone combo connector on the pro dock, connect your headset, microphone, or speaker to the headset and microphone combo connector.

Note: The headset and microphone combo connector on the pro dock are automatically enabled when you have successfully connected the pro dock to your notebook computer and installed the device driver. However, if you cannot hear anything from the headset connected to the headset and microphone combo connector on the pro dock, you can manually enable the headset and microphone combo connector on the pro dock. See “Manually setting the playback device and recording device” on page 30 for more information.

Using the Gigabit Ethernet connector

To use the Gigabit Ethernet connector on the pro dock, connect the pro dock to standard 10 Mbps, 100 Mbps, or 1000 Mbps network, and wait until the pro dock is fully configured by the Windows operating system.

The Gigabit Ethernet connection on the pro dock fully supports the ThinkVantage Access Connections program.

There are two indicators on the top of the Gigabit Ethernet connector.

Working status	Indicator activity
The pro dock connects to the Ethernet successfully.	The right indicator stays on in green.
The pro dock is transferring data.	The left indicator keeps flashing in amber.

Using the USB connectors

To use the USB 2.0 connectors, connect a USB 2.0 device such as the mouse or keyboard to the USB 2.0 connectors on the pro dock. To use the USB 3.0 connectors, connect a USB 3.0 device to the USB 3.0 connector on the pro dock.

When the USB device is correctly connected to a USB connector on the pro dock, an information window will be displayed in the Windows notification area, indicating that the USB device has been connected to the computer.

Using the Always On USB 3.0 connectors

By default, the Always-on USB 3.0 connector (SS) enables you to charge some mobile digital devices and smartphones when your computer is in the following situation:

- When your computer is on or in sleep mode
- When your computer is in hibernation mode or is turned off
- When the pro dock is disconnected from your computer

It can supply power up to 2.4 A during the charging process. When you press the power button to turn off the pro dock, the pro dock stops power supply.

Using the DP output connector

You can connect one external monitor to the pro dock by using the DP output connector.

Using the DVI-I video output connectors

You can connect one external monitor to the pro dock by using the DVI-I video output connector.

To use the DVI-I video output connector, connect the DVI cable of the external monitor to the DVI-I video output connector on the pro dock.

You also can connect an external monitor with a VGA connector to the pro dock using a DVI-I to VGA adapter. To use the DVI-I to VGA adapter, do the following:

1. Connect the DVI-I to VGA adapter to the DVI-I video output connector on the pro dock.
2. Tighten the two screws on the DVI-I to VGA adapter.

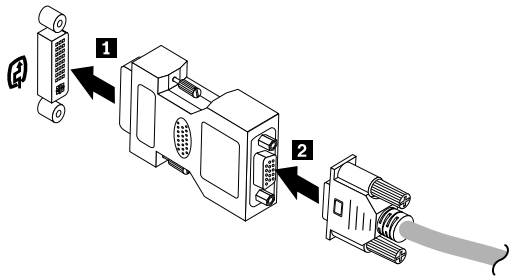

Figure 9. Using the DVI-I to VGA adapter

3. Connect the VGA connector of the external monitor to the DVI-I to VGA adapter using a VGA cable.

You can adjust video settings to customize the use of the pro dock. For more information, see “Working with the pro dock utility” on page 30.

Note: For better performance, occasionally adjust the external monitor to realign its settings with the video output of the pro dock. For more information about the adjustment procedure, refer to the documentation that comes with your external monitor.

Working with the pro dock

This section provides information about the video output function of the pro dock and instructions on how to work with the pro dock utility, which enables you to configure the pro dock to your needs.

Understanding the video output modes

In the Windows 7, Windows 8, or Windows 8.1 operating system, the pro dock works in the following three video output modes:

- “Extend mode” on page 29
- “Mirror mode” on page 29
- “Single-display mode” on page 30

By default, the pro dock works in extend mode. The first time you connect the pro dock to your notebook computer, the resolution of your notebook computer and the connected monitor will be changed to the default. You can configure your resolution to your needs

For the Windows 10 operating system:

1. Right-click the **ThinkPad USB 3.0 Ultra Dock** icon  in the Windows notification area. A pop-up window opens.
2. Select **Video Setup**. The Setting window opens.

3. In the **Multiple displays** drop-down list box, select one of the options to set your display output.

Extend mode

When the pro dock is in extend mode, it splits your display across two monitors.

There are three options when you are using extend mode:

- **Extend:** When you select this option, your notebook computer monitor becomes the primary display and the external monitor becomes the secondary display. By default, the external monitor display is on the right side of the notebook computer monitor display.
- **Extend To:** When you select this option, your notebook computer monitor becomes the primary display and the external monitor becomes the secondary display. You can give the monitor its own frame buffer through the submenu options **Right**, **Left**, **Above**, and **Below** or through drag operations. The display space is a continuous area; therefore, windows and objects can be moved between different displays.
- **Set as Main Monitor:** When you select this option, the external monitor becomes the primary display and the notebook computer monitor becomes the secondary display.

In extend mode, you can drag and drop windows from one display to the other. You also can increase your productivity by doing the following:

- Reading e-mails on one display and opening attachments on the other
- Expanding a spreadsheet across two displays
- Increasing your work area by putting all the palette and toolbars on the other display when you are doing graphics editing
- Keeping the desktop on one display and watching videos on the other

To enter extend mode, do the following:

1. Click the **ThinkPad USB 3.0 Pro Dock** icon  in the Windows notification area. A pop-up window opens.
2. Select **ThinkPad USB 3.0 Pro Dock**, and then select one from the following:
   - **Extend**
   - **Extend To**
   - **Set as Main Monitor**

To exit extend mode, do the following:

1. Click the **ThinkPad USB 3.0 Pro Dock** icon  in the Windows notification area. A pop-up window opens.
2. Select **ThinkPad USB 3.0 Pro Dock → Off**.

Mirror mode

When the pro dock is in mirror mode, it clones your notebook computer screen to the external monitor. the pro dock automatically selects the settings (screen resolution, color quality, and refresh rate) for the external monitor, which achieves optimal resolution based on your notebook computer.

To enter mirror mode, do the following:

1. Click the **ThinkPad USB 3.0 Pro Dock** icon  in the Windows notification area. A pop-up window opens.
2. Select **ThinkPad USB 3.0 Pro Dock → Mirror**.

To exit mirror mode, do the following:

1. Click the **ThinkPad USB 3.0 Pro Dock** icon  in the Windows notification area. A pop-up window opens.
2. Select **ThinkPad USB 3.0 Pro Dock → Off**.

Single-display mode

When the pro dock is in single-display mode, it enables you to show your desktop on only one screen.

There are two options when you are using single-display mode:

- **Notebook Monitor Off:** When you select this option, the display of your notebook computer monitor turns off and the display of the external monitor turns on.
- **Off:** When you select this option, the display of the external monitor turns off and the display of your notebook computer monitor turns on. However, other functions such as audio, Ethernet, and USB connection can still work though the display is off.

To enter single-display mode, do the following:

1. Click the **ThinkPad USB 3.0 Pro Dock** icon  in the Windows notification area. A pop-up window opens.
2. Select **ThinkPad USB 3.0 Pro Dock → Notebook Monitor Off** or **Off**.

To exit single-display mode, do the following:

1. Click the **ThinkPad USB 3.0 Pro Dock** icon  in the Windows notification area. A pop-up window opens.
2. Select **ThinkPad USB 3.0 Pro Dock**, and then select another mode as you want.

Working with the pro dock utility

The pro dock utility enables you to configure the display settings of the pro dock.

Note: The settings you have configured for the pro dock will be retained each time when you connect the notebook computer to the pro dock. This feature enables you to use your notebook computer with multiple docks. For example, if you use a notebook computer both at home and at work, you can set up both work areas with docks. Then, you just connect your notebook computer to the pro dock at either location, and you are ready to work.

Manually setting the playback device and recording device

By default, the Lenovo notebook computers use the headset and microphone combo connector on the pro dock and disable built-in audio connectors when the pro dock is connected.

To manually set the playback device and recording device on the pro dock, do the following:

For the Windows 7 operating system:

1. Click the **ThinkPad USB 3.0 Pro Dock** icon  in the Windows notification area. A pop-up window opens.
2. Select **Audio Setup**. The Sound and Audio Devices Properties window opens.
3. Click the **Audio** tab.
4. Select a Lenovo USB audio device or other audio device from the **Sound playback** panel, and then select a Lenovo USB audio device or other audio device from the **Sound recording** panel.
5. Click **OK**.

For the Windows 8.1 operating system:

1. Click the **ThinkPad USB 3.0 Pro Dock** icon  in the Windows notification area. A pop-up window opens.
2. Select **Audio Setup**. The Sound window opens.
3. On the **Playback** tab, select a USB audio line-out device. On the **Recording** tab, select a USB audio line-in device.
4. Click **OK**.

For the Windows 10 operating system:

1. Right-click the **ThinkPad USB 3.0 Ultra Dock** icon  in the Windows notification area. A pop-up window opens.
2. Select **Audio Setup**. The Sound window opens.
3. On the **Playback** tab, select a USB audio line-out device. On the **Recording** tab, select a USB audio line-in device.
4. Click **OK**.

Rotating the external monitor display

The pro dock enables you to rotate only your external monitor display as you want.

For the Windows 7, Windows 8, or Windows 8.1 operating system:

To rotate the external monitor display, do the following:

1. Click the **ThinkPad USB 3.0 Pro Dock** icon  in the Windows notification area. A pop-up window opens.
2. Select **ThinkPad USB 3.0 Pro Dock → Screen Rotation**, and then select one of the following options:
   - **Normal**: The external monitor display remains the same as your notebook computer monitor display.
   - **Rotated Left**: The external monitor display rotates 90 degrees to the left.
   - **Rotated Right**: The external monitor display rotates 90 degrees to the right.
   - **Upside-Down**: The external monitor display becomes upside-down.

Note: For a normal display, you can continually click **Rotated Left** or **Rotated Right** until the display becomes upside-down.

For the Windows 10 operating system:

1. Right-click the **ThinkPad USB 3.0 Ultra Dock** icon  in the Windows notification area. A pop-up window opens.
2. Select **Video Setup**. The Setting window opens.
3. In the **Orientation** drop-down list box, select one of the following options:
   - **Landscape**: The external monitor display remains the same as your notebook computer monitor display.
   - **Portrait**: The external monitor display rotates 90 degrees to the left.
   - **Landscape (flipped)**: The external monitor display becomes upside-down.
   - **Portrait (flipped)**: The external monitor display rotates 90 degrees to the right.
4. Follow the instructions on the screen to complete the setting.

Setting the resolution of the external monitor

The pro dock enables you to set the resolution of the external monitor.

For the Windows 7, Windows 8, or Windows 8.1 operating system:

In extend mode and single-display mode, you can set the resolution of the external monitor by doing the following:

1. Click the **ThinkPad USB 3.0 Pro Dock** icon  in the Windows notification area. A pop-up window opens.
2. Select **ThinkPad USB 3.0 Pro Dock → Screen Resolution**, and then select the desired screen resolution option for the external monitor. For example, “2048 x 1152” means that the video output resolution will be 2048 by 1152 pixels.

In mirror mode, you can set the resolution of the external monitor by doing the following:

1. Click the **ThinkPad USB 3.0 Pro Dock** icon  in the Windows notification area. A pop-up window opens.
2. Select **Video Setup**. A window opens.
3. In the **Resolution** drop-down list box, move the slider up to increase or down to decrease the resolution of the external monitor.

For the Windows 10 operating system:

1. Right-click the **ThinkPad USB 3.0 Ultra Dock** icon  in the Windows notification area. A pop-up window opens.
2. Select **Video Setup**. The Setting window opens.
3. On the right pane of the window, scroll down the slide bar to the end.
4. Click **Advanced display settings**.
5. In the **Resolution** drop-down list box, set the resolution of the external monitor.

Switching video output modes

For the Windows 7, Windows 8, or Windows 8.1 operating system:

To switch from one video output to another, do the following:

1. Click the **ThinkPad USB 3.0 Pro Dock** icon  in the Windows notification area. A pop-up window opens.
2. Select **ThinkPad USB 3.0 Pro Dock**, and then select the video output mode as you want.

For more information about the video output modes, refer to “Understanding the video output modes” on page 28.

Supported resolutions and refresh rates

The following table lists the refresh rates supported at various resolutions for the pro dock video output.

Table 4. Supported resolutions and refresh rates: DP output only

Resolution	Refresh rate (Unit: Hz)
640 x 480	60, 67, 72, 75, 85
720 x 400	70, 85, 88
720 x 480	50, 60
768 x 576	50, 60
800 x 600	56, 60, 72, 75, 85
832 x 624	75
800 x 480	60
848 x 480	60
1024 x 600	60
1024 x 768	60, 70, 75, 85
1152 x 864	75
1152 x 870	75
1280 x 720	50, 60
1280 x 768	60, 75, 85
1280 x 800	60
1280 x 960	60, 85
1280 x 1024	60, 75
1360 x 768	60
1366 x 768	50, 60
1368 x 768	60
1400 x 1050	60, 75, 85
1440 x 900	60
1600 x 900	60
1600 x 1200	60
1680 x 1050	60
1920 x 1080	50, 60
1920 x 1200	60
2048 x 1080	60
2048 x 1152	60

Table 4. Supported resolutions and refresh rates: DP output only (continued)

Resolution	Refresh rate (Unit: Hz)
2048 x 1280	60
2048 x 1536	60
2560 x 1440	50, 60
2560 x 1600	60

Notes:

1. Resolution refers to the number of pixels horizontally and vertically displayed on the screen.
2. Refresh rate (also called vertical frequency) measures the speed that the entire screen is rescanned.

Table 5. Supported resolutions and refresh rates: DVI-I output only or VGA output only

Resolution	Refresh rate (Unit: Hz)
640 x 480	60, 67, 72, 75, 85
720 x 400	70, 85, 88
720 x 480	50, 60
768 x 576	50, 60
800 x 600	56, 60, 72, 75, 85
832 x 624	75
800 x 480	60
848 x 480	60
1024 x 600	60
1024 x 768	60, 70, 75, 85
1152 x 864	75
1152 x 870	75
1280 x 720	50, 60
1280 x 768	60, 75, 85
1280 x 800	60
1280 x 960	60, 85
1280 x 1024	60, 75
1360 x 768	60
1366 x 768	50, 60
1368 x 768	60
1400 x 1050	60, 75, 85
1440 x 900	60
1600 x 900	60
1600 x 1200	60
1680 x 1050	60
1920 x 1080	50, 60
1920 x 1200	60

Table 5. Supported resolutions and refresh rates: DVI-I output only or VGA output only (continued)

Resolution	Refresh rate (Unit: Hz)
2048 x 1080	60
2048 x 1152	60

Table 6. Supported resolutions and refresh rates: DVI-I/DP simultaneous output or VGA/DP simultaneous output

Resolution	Refresh rate (Unit: Hz)
640 x 480	60, 67, 72, 75, 85
720 x 400	70, 85, 88
720 x 480	50, 60
768 x 576	50, 60
800 x 600	56, 60, 72, 75, 85
832 x 624	75
800 x 480	60
848 x 480	60
1024 x 600	60
1024 x 768	60, 70, 75, 85
1152 x 864	75
1152 x 870	75
1280 x 720	50, 60
1280 x 768	60, 75, 85
1280 x 800	60
1280 x 960	60, 85
1280 x 1024	60, 75
1360 x 768	60
1366 x 768	50, 60
1368 x 768	60
1400 x 1050	60, 75, 85
1440 x 900	60
1600 x 900	60
1600 x 1200	60
1680 x 1050	60
1920 x 1080	50, 60
1920 x 1200	60
2048 x 1080	60
2048 x 1152	60

Troubleshooting

This chapter provides some troubleshooting hints and tips to assist you if you experience any problems with the pro dock. Check the following items first to try to solve the problem.

General

1. **The ThinkPad USB 3.0 Pro Dock icon is not displayed on the screen.**

   The **ThinkPad USB 3.0 Pro Dock** icon is displayed only when an external monitor is connected to the pro dock. If an external monitor is connected, ensure that the video cable is fully inserted into the pro dock and the monitor.

2. **The power and connection indicator of the pro dock is not on.**

   Ensure that you have correctly connected the power adapter to the pro dock and a working electrical outlet, and that you have pressed the power button. Do not use any power adapter other than the one provided with the pro dock.

3. **You connect the pro dock to a computer with the provided USB 3.0 cable, but the pro dock does not work.**

   a. Ensure that the pro dock is well powered by its power adapter. the pro dock always needs external power adapter for operation, because it does not take power from the USB connector attached to your notebook computer.

   b. Ensure that the device driver of the pro dock is well installed; if not, install the device driver and restart the computer.

   c. Ensure that the USB connector on your computer works well; if not, replace with other USB connectors.

4. **The 2.4 GHz wireless keyboard or 2.4 GHz wireless mouse function is interrupted. The mouse pointer lags or it cannot move. Some characters are lost when you input by the keyboard.**

   It is recommended that you connect your 2.4 GHz device receiver to the front USB 3.0 connector on the pro dock and avoid connecting another USB 3.0 device next to the connector with the receiver attached.

5. **When you connect your device (such as a mobile phone) to the dock for charging, the charging speed becomes slow.**

   Ensure that you connect your mobile phone to the Always On USB 3.0 connector. Disconnect the pro dock from the computer, the charging speed may become faster.

6. **The mobile phones or other USB devices cannot be charged when connected to the Always On USB 3.0 connector.**

   It is recommended that you can disconnect the pro dock from the notebook computer and then you can charge the mobile phones or other USB devices.

7. **Your mouse and keyboard cannot wake up your computer system when connected to the Always On USB 3.0 connector.**

   It is recommended that your mouse or keyboard is connected to the other USB connector.

Video output

1. **The external monitor display is blank.**

   - Ensure that the notebook computer connected to the pro dock is running correctly and is not in standby or hibernation mode. When the notebook computer is in standby or hibernation mode, the external monitor display is always blank.
   - Ensure that the device driver is installed following the installation instructions and the icon for the pro dock is visible in the Windows notification area.
   - Ensure that the following connections are correct:
     - The connection between the USB 3.0 cable and your notebook computer
     - The connection between the USB 3.0 cable and the pro dock
     - The connection among the power adapter, the pro dock, and the electrical outlet
     - The connection between your video cable to the pro dock and the external monitor.

– The connection between the video cable and the DVI-I video output connector

Note: For the connection of the VGA connector, ensure that the DVI-I to VGA adapter also is secured by the screws on both sides of it.

- If the problem persists, disconnect all connections of the pro dock, and uninstall the pro dock device driver. Then, reinstall the device driver and the pro dock.

2. **You cannot play back videos on the external monitor but can play them back on the notebook computer monitor.**

   Some notebook computers do not support the Certified Output Protection Protocol (COPP), and you will not be able to play back the protected videos on the external monitor connected to the pro dock. The Corel WinDVD 10 program also has limitations on playing back videos in the Windows XP operating system.

   To play back videos on the external monitor, you can connect the external monitor to the VGA connector on your notebook computer, and extend the display to the external monitor. For more information about configuring the display settings, see “Working with the pro dock utility” on page 30.

3. **The images on the external monitor flutter.**

   To solve the problem, check the following:

   - Ensure that the external monitor is well connected to the DVI-I video output connector of the pro dock.
   - Check the display resolution setting of the notebook computer and ensure that the resolution is supported by the pro dock.

4. **The images on the external monitor is not in correct colors.**

   To solve the problem, do the following:

   a. Ensure that the external monitor is well connected to the DVI-I video output connector of the pro dock.

   b. Check the display resolution setting of the computer and ensure that the resolution is supported by the pro dock.

5. **The computer can play back Web flashes. However, when you drag the window to the external monitor and maximize the playback window, the playback stops.**

   To solve the problem, update your Adobe Flash Player to the latest version.

6. **The video files cannot be played smoothly on screen.**

   Ensure that you stop running the program which may influence the CPU performance during video playback.

Audio

You cannot hear anything through your notebook computer speakers or you cannot use the audio connectors on the notebook computer.

By default, ThinkPad and other Lenovo® notebook computers use the headset and microphone combo connector on the pro dock and disable built-in audio connectors when the pro dock is connected.

To enable the built-in audio connectors on your notebook computer, do the following:

1. Right-click the **Volume** icon in the Windows notification area.
2. Select **Sounds**, and the Sound window is displayed.
3. Click the **Playback** tab to select a built-in audio device, and then click the **Recording** tab to select another built-in audio device.
4. On the **Playback** tab, select a built-in audio device. On the **Recording** tab, select another built-in audio device.

See “Manually setting the playback device and recording device” on page 30 for more information.

Notes:

1. To apply the new settings, restart the applications that are using the audio devices.
2. The settings you have adjusted will be saved until you change the settings next time.

Appendix A. Service and Support

The following information describes the technical support that is available for your product, during the warranty period or throughout the life of your product. Refer to the Lenovo Limited Warranty for a full explanation of Lenovo warranty terms.

Online technical support

Online technical support is available during the lifetime of a product at:
http://www.lenovo.com/support

Product replacement assistance or exchange of defective components also is available during the warranty period. In addition, if your option is installed in a Lenovo computer, you might be entitled to service at your location. A Lenovo technical support representative can help you determine the best alternative.

Telephone technical support

Installation and configuration support through the Customer Support Center will be available until 90 days after the option has been withdrawn from marketing. After that time, the support is cancelled, or made available for a fee, at Lenovo's discretion. Additional support is also available for a nominal fee.

Before contacting a Lenovo technical support representative, please have the following information available: option name and number, proof of purchase, computer manufacturer, model, serial number and manual, the exact wording of any error message, description of the problem, and the hardware and software configuration information for your system.

Your technical support representative might want to walk you through the problem while you are at your computer during the call.

Telephone numbers are subject to change without notice. The most up-to-date telephone list for Lenovo Support is always available at http://www.lenovo.com/support/phone. If the telephone number for your country or region is not listed, contact your Lenovo reseller or Lenovo marketing representative.

Accessibility information

Documentation in accessible formats

Lenovo provides electronic documentation in accessible formats, such as properly tagged PDF files or HyperText Markup Language (HTML) files. Lenovo electronic documentation is developed to ensure that visually impaired users can read the documentation through a screen reader. Each image in the documentation also includes adequate alternative text to explain the image so that visually impaired users can understand the image when they use a screen reader.

To open and view PDF files, your computer must have the Adobe Reader program installed. The Adobe Reader program also is available for download at:
http://www.adobe.com

© Copyright Lenovo 2015

Appendix B. Lenovo Limited Warranty

L505-0010-02 08/2011

This Lenovo Limited Warranty consists of the following parts:

Part 1 - General Terms

Part 2 - Country-specific Terms

Part 3 - Warranty Service Information

The terms of **Part 2** replace or modify terms of **Part 1** as specified for a particular country.

Part 1 - General Terms

This Lenovo Limited Warranty applies only to Lenovo hardware products you purchased for your own use and not for resale. This Lenovo Limited Warranty is available in other languages at www.lenovo.com/warranty.

What this Warranty Covers

Lenovo warrants that each Lenovo hardware product that you purchase is free from defects in materials and workmanship under normal use during the warranty period. The warranty period for the product starts on the original date of purchase as shown on your sales receipt or invoice or as may be otherwise specified by Lenovo. The warranty period and type of warranty service that apply to your product are as specified in "**Part 3 - Warranty Service Information**" below. This warranty only applies to products in the country or region of purchase.

THIS WARRANTY IS YOUR EXCLUSIVE WARRANTY AND REPLACES ALL OTHER WARRANTIES OR CONDITIONS, EXPRESS OR IMPLIED, INCLUDING, BUT NOT LIMITED TO, ANY IMPLIED WARRANTIES OR CONDITIONS OF MERCHANTABILITY OR FITNESS FOR A PARTICULAR PURPOSE. AS SOME STATES OR JURISDICTIONS DO NOT ALLOW THE EXCLUSION OF EXPRESS OR IMPLIED WARRANTIES, THE ABOVE EXCLUSION MAY NOT APPLY TO YOU. IN THAT EVENT, SUCH WARRANTIES APPLY ONLY TO THE EXTENT AND FOR SUCH DURATION AS REQUIRED BY LAW AND ARE LIMITED IN DURATION TO THE WARRANTY PERIOD. AS SOME STATES OR JURISDICTIONS DO NOT ALLOW LIMITATIONS ON THE DURATION OF AN IMPLIED WARRANTY, THE ABOVE LIMITATION ON DURATION MAY NOT APPLY TO YOU.

How to Obtain Warranty Service

If the product does not function as warranted during the warranty period, you may obtain warranty service by contacting Lenovo or a Lenovo approved Service Provider. A list of approved Service Providers and their telephone numbers is available at: www.lenovo.com/support/phone.

Warranty service may not be available in all locations and may differ from location to location. Charges may apply outside a Service Provider's normal service area. Contact a local Service Provider for information specific to your location.

Customer Responsibilities for Warranty Service

Before warranty service is provided, you must take the following steps:
- follow the service request procedures specified by the Service Provider;

© Copyright Lenovo 2015

- backup or secure all programs and data contained in the product;
- provide the Service Provider with all system keys or passwords;
- provide the Service Provider with sufficient, free, and safe access to your facilities to perform service;
- remove all data, including confidential information, proprietary information and personal information, from the product or, if you are unable to remove any such information, modify the information to prevent its access by another party or so that it is not personal data under applicable law. The Service Provider shall not be responsible for the loss or disclosure of any data, including confidential information, proprietary information, or personal information, on a product returned or accessed for warranty service;
- remove all features, parts, options, alterations, and attachments not covered by the warranty;
- ensure that the product or part is free of any legal restrictions that prevent its replacement;
- if you are not the owner of a product or part, obtain authorization from the owner for the Service Provider to provide warranty service.

What Your Service Provider Will Do to Correct Problems

When you contact a Service Provider, you must follow the specified problem determination and resolution procedures.

The Service Provider will attempt to diagnose and resolve your problem by telephone, e-mail or remote assistance. The Service Provider may direct you to download and install designated software updates.

Some problems may be resolved with a replacement part that you install yourself called a “Customer Replaceable Unit” or “CRU.” If so, the Service Provider will ship the CRU to you for you to install.

If your problem cannot be resolved over the telephone; through the application of software updates or the installation of a CRU, the Service Provider will arrange for service under the type of warranty service designated for the product under “**Part 3 - Warranty Service Information**” below.

If the Service Provider determines that it is unable to repair your product, the Service Provider will replace it with one that is at least functionally equivalent.

If the Service Provider determines that it is unable to either repair or replace your product, your sole remedy under this Limited Warranty is to return the product to your place of purchase or to Lenovo for a refund of your purchase price.

Replacement Products and Parts

When warranty service involves the replacement of a product or part, the replaced product or part becomes Lenovo’s property and the replacement product or part becomes your property. Only unaltered Lenovo products and parts are eligible for replacement. The replacement product or part provided by Lenovo may not be new, but it will be in good working order and at least functionally equivalent to the original product or part. The replacement product or part shall be warranted for the balance of the period remaining on the original product.

Use of Personal Contact Information

If you obtain service under this warranty, you authorize Lenovo to store, use and process information about your warranty service and your contact information, including name, phone numbers, address, and e-mail address. Lenovo may use this information to perform service under this warranty. We may contact you to inquire about your satisfaction with our warranty service or to notify you about any product recalls or safety issues. In accomplishing these purposes, you authorize Lenovo to transfer your information to any country where we do business and to provide it to entities acting on our behalf. We may also disclose it where required by law. Lenovo’s privacy policy is available at www.lenovo.com/.

What this Warranty Does not Cover

This warranty does not cover the following:

- uninterrupted or error-free operation of a product;
- loss of, or damage to, your data by a product;
- any software programs, whether provided with the product or installed subsequently;
- failure or damage resulting from misuse, abuse, accident, modification, unsuitable physical or operating environment, natural disasters, power surges, improper maintenance, or use not in accordance with product information materials;
- damage caused by a non-authorized service provider;
- failure of, or damage caused by, any third party products, including those that Lenovo may provide or integrate into the Lenovo product at your request;
- any technical or other support, such as assistance with "how-to" questions and those regarding product set-up and installation;
- products or parts with an altered identification label or from which the identification label has been removed.

Limitation of Liability

Lenovo is responsible for loss or damage to your product only while it is in the Service Provider's possession or in transit, if the Service Provider is responsible for the transportation.

Neither Lenovo nor the Service Provider is responsible for loss or disclosure of any data, including confidential information, proprietary information, or personal information, contained in a product.

UNDER NO CIRCUMSTANCES, AND NOTWITHSTANDING THE FAILURE OF ESSENTIAL PURPOSE OF ANY REMEDY SET FORTH HEREIN, SHALL LENOVO, ITS AFFILIATES, SUPPLIERS, RESELLERS, OR SERVICE PROVIDERS BE LIABLE FOR ANY OF THE FOLLOWING EVEN IF INFORMED OF THEIR POSSIBILITY AND REGARDLESS OF WHETHER THE CLAIM IS BASED IN CONTRACT, WARRANTY, NEGLIGENCE, STRICT LIABILITY OR OTHER THEORY OF LIABILITY: 1) THIRD PARTY CLAIMS AGAINST YOU FOR DAMAGES; 2) LOSS, DAMAGE OR DISCLOSURE OF YOUR DATA; 3) SPECIAL, INCIDENTAL, PUNITIVE, INDIRECT OR CONSEQUENTIAL DAMAGES, INCLUDING BUT NOT LIMITED TO LOST PROFITS, BUSINESS REVENUE, GOODWILL OR ANTICIPATED SAVINGS. IN NO CASE SHALL THE TOTAL LIABILITY OF LENOVO, ITS AFFILIATESS, SUPPLIERS, RESELLERS OR SERVICE PROVIDERS FOR DAMAGES FROM ANY CAUSE EXCEED THE AMOUNT OF ACTUAL DIRECT DAMAGES, NOT TO EXCEED THE AMOUNT PAID FOR THE PRODUCT.

THE FOREGOING LIMITATIONS DO NOT APPLY TO DAMAGES FOR BODILY INJURY (INCLUDING DEATH), DAMAGE TO REAL PROPERTY OR DAMAGE TO TANGIBLE PERSONAL PROPERTY FOR WHICH LENOVO IS LIABLE UNDER LAW. AS SOME STATES OR JURISDICTIONS DO NOT ALLOW THE EXCLUSION OR LIMITATION OF INCIDENTAL OR CONSEQUENTIAL DAMAGES, THE ABOVE LIMITATION OR EXCLUSION MAY NOT APPLY TO YOU.

Your Other Rights

THIS WARRANTY GIVES YOU SPECIFIC LEGAL RIGHTS. YOU MAY HAVE OTHER RIGHTS ACCORDING TO THE APPLICABLE LAWS OF YOUR STATE OR JURISDICTION. YOU MAY ALSO HAVE OTHER RIGHTS UNDER A WRITTEN AGREEMENT WITH LENOVO. NOTHING IN THIS WARRANTY AFFECTS STATUTORY RIGHTS, INCLUDING RIGHTS OF CONSUMERS UNDER LAWS OR REGULATIONS GOVERNING THE SALE OF CONSUMER GOODS THAT CANNOT BE WAIVED OR LIMITED BY CONTRACT.

Part 2 - Country-specific Terms

Australia

“Lenovo” means Lenovo (Australia & New Zealand) Pty Limited ABN 70 112 394 411. Address: Level 10, North Tower, 1-5 Railway Street, Chatswood, NSW, 2067. Telephone: +61 2 8003 8200. Email: lensyd_au@lenovo.com

The following replaces the same section in Part 1:

What this Warranty Covers:

Lenovo warrants that each hardware product that you purchase is free from defects in materials and workmanship under normal use and conditions during the warranty period. If the product fails due to a covered defect during the warranty period, Lenovo will provide you a remedy under this Limited Warranty. The warranty period for the product starts on the original date of purchase specified on your sales receipt or invoice unless Lenovo informs you otherwise in writing. The warranty period and type of warranty service that apply to your product are set forth below in **Part 3 - Warranty Service Information**.

THE BENEFITS GIVEN BY THIS WARRANTY ARE IN ADDITION TO YOUR RIGHTS AND REMEDIES AT LAW, INCLUDING THOSE UNDER THE AUSTRALIAN CONSUMER LAW.

The following replaces the same section in Part 1:

Replacement Products and Parts:

When warranty service involves the replacement of a product or part, the replaced product or part becomes Lenovo’s property and the replacement product or part becomes your property. Only unaltered Lenovo products and parts are eligible for replacement. The replacement product or part provided by Lenovo may not be new, but it will be in good working order and at least functionally equivalent to the original product or part. The replacement product or part shall be warranted for the balance of the period remaining on the original product. Products and parts presented for repair may be replaced by refurbished products or parts of the same type rather than being repaired. Refurbished parts may be used to repair the product; and repair of the product may result in loss of data, if the product is capable of retaining user-generated data.

The following is added to the same section in Part 1:

Use of Personal Contact Information:

Lenovo will not be able to perform our service under this warranty if you refuse to provide your information or do not wish us to transfer your information to our agent or contractor. You have the right to access your personal contact information and request correction of any errors in it pursuant to the Privacy Act 1988 by contacting Lenovo.

The following replaces the same section in Part 1:

Limitation of Liability:

Lenovo is responsible for loss or damage to your product only while it is in the Service Provider’s possession or in transit, if the Service Provider is responsible for the transportation.

Neither Lenovo nor the Service Provider is responsible for loss or disclosure of any data, including confidential information, proprietary information, or personal information, contained in a product.

TO THE EXTENT PERMITTED BY LAW, UNDER NO CIRCUMSTANCES AND NOTWITHSTANDING THE FAILURE OF ESSENTIAL PURPOSE OF ANY REMEDY SET FORTH HEREIN, SHALL LENOVO, ITS AFFILIATES, SUPPLIERS, RESELLERS, OR SERVICE PROVIDERS BE LIABLE FOR ANY OF THE FOLLOWING EVEN IF INFORMED OF THEIR POSSIBILITY AND REGARDLESS OF WHETHER THE CLAIM IS BASED IN CONTRACT, WARRANTY, NEGLIGENCE, STRICT LIABILITY OR OTHER THEORY

OF LIABILITY: 1) THIRD PARTY CLAIMS AGAINST YOU FOR DAMAGES; 2) LOSS, DAMAGE OR DISCLOSURE OF YOUR DATA; 3) SPECIAL, INCIDENTAL, PUNITIVE, INDIRECT OR CONSEQUENTIAL DAMAGES, INCLUDING BUT NOT LIMITED TO LOST PROFITS, BUSINESS REVENUE, GOODWILL OR ANTICIPATED SAVINGS. IN NO CASE SHALL THE TOTAL LIABILITY OF LENOVO, ITS AFFILIATESS, SUPPLIERS, RESELLERS OR SERVICE PROVIDERS FOR DAMAGES FROM ANY CAUSE EXCEED THE AMOUNT OF ACTUAL DIRECT DAMAGES, NOT TO EXCEED THE AMOUNT PAID FOR THE PRODUCT.

THE FOREGOING LIMITATIONS DO NOT APPLY TO DAMAGES FOR BODILY INJURY (INCLUDING DEATH), DAMAGE TO REAL PROPERTY OR DAMAGE TO TANGIBLE PERSONAL PROPERTY FOR WHICH LENOVO IS LIABLE UNDER LAW.

The following replaces the same section in Part 1:

Your Other Rights:

THIS WARRANTY GIVES YOU SPECIFIC LEGAL RIGHTS. YOU ALSO HAVE OTHER RIGHTS AT LAW, INCLUDING UNDER THE AUSTRALIAN CONSUMER LAW. NOTHING IN THIS WARRANTY AFFECTS STATUTORY RIGHTS OR RIGHTS AT LAW, INCLUDING RIGHTS THAT CANNOT BE WAIVED OR LIMITED BY CONTRACT.

For example, our products come with guarantees that cannot be excluded under the Australian Consumer Law. You are entitled to a replacement or refund for a major failure and compensation for any other reasonably foreseeable loss or damage. You are also entitled to have the products repaired or replaced if the products fail to be of acceptable quality and the failure does not amount to a major failure.

New Zealand

The following is added to the same section in Part 1:

Use of Personal Information:

Lenovo will not be able to perform our service under this warranty if you refuse to provide your information or do not wish us to transfer your information to our agent or contractor. You have the right to access your personal information and request correction of any errors in it pursuant to the Privacy Act 1993 by contacting Lenovo (Australia & New Zealand) Pty Limited ABN 70 112 394 411. Address: Level 10, North Tower, 1-5 Railway Street, Chatswood, NSW, 2067. Telephone: 61 2 8003 8200. Email: lensyd_au@lenovo.com

Bangladesh, Cambodia, India, Indonesia, Nepal, Philippines, Vietnam and Sri Lanka

The following is added to Part 1:

Dispute Resolution

Disputes arising out of or in connection with this warranty shall be finally settled by arbitration held in Singapore. This warranty shall be governed, construed and enforced in accordance with the laws of Singapore, without regard to conflict of laws. If you acquired the product in **India**, disputes arising out of or in connection with this warranty shall be finally settled by arbitration held in Bangalore, India. Arbitration in Singapore shall be held in accordance with the Arbitration Rules of Singapore International Arbitration Center ("SIAC Rules") then in effect. Arbitration in India shall be held in accordance with the laws of India then in effect. The arbitration award shall be final and binding on the parties without appeal. Any award shall be in writing and set forth the findings of fact and the conclusions of law. All arbitration proceedings, including all documents presented in such proceedings shall be conducted in the English language. The English language version of this warranty prevails over any other language version in such proceedings.

European Economic Area (EEA)

The following is added to Part 1:

Customers in the EEA may contact Lenovo at the following address: EMEA Service Organisation, Lenovo (International) B.V., Floor 2, Einsteinova 21, 851 01, Bratislava, Slovakia. Service under this warranty for Lenovo hardware products purchased in EEA countries may be obtained in any EEA country in which the product has been announced and made available by Lenovo.

Russia

The following is added to Part 1:

Product Service Life

The product service life is four (4) years from the original date of purchase.

Part 3 - Warranty Service Information

Product Type	Country or Region of Purchase	Warranty Period	Type of Warranty Service
ThinkPad USB 3.0 Ultra Dock	Worldwide	3 year	1, 4
ThinkPad USB 3.0 Pro Dock	Worldwide	3 year	1, 4

If required, your Service Provider will provide repair or exchange service depending on the type of warranty service specified for your product and the available service. Scheduling of service will depend upon the time of your call, parts availability, and other factors.

Types of Warranty Service

1. Customer Replaceable Unit ("CRU") Service

Under CRU Service, the Service Provider will ship CRUs to you at its cost for installation by you. CRU information and replacement instructions are shipped with your product and are available from Lenovo at any time upon request. CRUs that are easily installed by you are called "Self-service CRUs". "Optional-service CRUs" are CRUs that may require some technical skill and tools. Installation of Self-service CRUs is your responsibility. You may request that a Service Provider install Optional-service CRUs under one of the other types of warranty service designated for your product. An optional service offering may be available for purchase from a Service Provider or Lenovo under which Self-service CRUs would be installed for you. You may find a list of CRUs and their designation in the publication that was shipped with your product or at www.lenovo.com/CRUs. The requirement to return a defective CRU, if any, will be specified in the instructions shipped with a replacement CRU. When return is required: 1) return instructions, a prepaid return shipping label, and a container will be included with the replacement CRU; and 2) you may be charged for the replacement CRU if the Service Provider does not receive the defective CRU from you within thirty (30) days of your receipt of the replacement CRU.

2. On-site Service

Under On-Site Service, a Service Provider will either repair or exchange the product at your location. You must provide a suitable working area to allow disassembly and reassembly of the product. Some repairs may need to be completed at a service center. If so, the Service Provider will send the product to the service center at its expense.

3. Courier or Depot Service

Under Courier or Depot Service, your product will be repaired or exchanged at a designated service center, with shipping at the expense of the Service Provider. You are responsible for disconnecting the product and packing it in a shipping container provided to you to return your product to a designated service center. A courier will pick up your product and deliver it to the designated service center. The service center will return the product to you at its expense.

4. Customer Carry-In Service

Under Customer Carry-In Service, your product will be repaired or exchanged after you deliver it to a designated service center at your risk and expense. After the product has been repaired or exchanged, it will be made available to you for collection. If you fail to collect the product, the Service Provider may dispose of the product as it sees fit, with no liability to you.

5. Mail-In Service

Under Mail-In Service, your product will be repaired or exchanged at a designated service center after you deliver it at your risk and expense. After the product has been repaired or exchanged, it will be returned to you at Lenovo's risk and expense, unless the Service Provider specifies otherwise.

6. Customer Two-Way Mail-In Service

Under Customer Two-Way Mail-In Service, your product will be repaired or exchanged after you deliver it to a designated service center at your risk and expense. After the product has been repaired or exchanged, it will be made available to you for return shipping at your risk and expense. If you fail to arrange return shipment, the Service Provider may dispose of the product as it sees fit, with no liability to you.

7. Product Exchange Service

Under Product Exchange Service, Lenovo will ship a replacement product to your location. You are responsible for its installation and verification of its operation. The replacement product becomes your property in exchange for the failed product, which becomes the property of Lenovo. You must pack the failed product in the shipping carton in which you received the replacement product and return it to Lenovo. Transportation charges, both ways, shall be at Lenovo's expense. If you fail to use the carton in which the replacement product was received, you may be responsible for any damage to the failed product occurring during shipment. You may be charged for the replacement product if Lenovo does not receive the failed product within thirty (30) days of your receipt of the replacement product.

Suplemento de Garantía para México

Este Suplemento se considera parte integrante de la Garantía Limitada de Lenovo y será efectivo única y exclusivamente para los productos distribuidos y comercializados dentro del Territorio de los Estados Unidos Mexicanos. En caso de conflicto, se aplicarán los términos de este Suplemento.

Todos los programas de software precargados en el equipo sólo tendrán una garantía de treinta (30) días por defectos de instalación desde la fecha de compra. Lenovo no es responsable de la información incluida en dichos programas de software y/o cualquier programa de software adicional instalado por Usted o instalado después de la compra del producto.

Los servicios no cubiertos por la garantía se cargarán al usuario final, previa obtención de una autorización.

En el caso de que se precise una reparación cubierta por la garantía, por favor, llame al Centro de soporte al cliente al 001-866-434-2080, donde le dirigirán al Centro de servicio autorizado más cercano. Si no existiese ningún Centro de servicio autorizado en su ciudad, población o en un radio de 70 kilómetros de su ciudad o población, la garantía incluirá cualquier gasto de entrega razonable relacionado con el transporte del producto a su Centro de servicio autorizado más cercano. Por favor, llame al Centro de

servicio autorizado más cercano para obtener las aprobaciones necesarias o la información relacionada con el envío del producto y la dirección de envío.

Para obtener una lista de los Centros de servicio autorizados, por favor, visite:
http://www.lenovo.com/mx/es/servicios

Importado por:
Lenovo México S. de R.L. de C.V.
Av. Santa Fe 505, Piso 15
Col. Cruz Manca
Cuajimalpa, D.F., México
C.P. 05349
Tel. (55) 5000 8500

Appendix C. Electronic emission notices

The following information refers to the ThinkPad USB 3.0 Ultra Dock and ThinkPad USB 3.0 Pro Dock.

Federal Communications Commission Declaration of Conformity

ThinkPad USB 3.0 Ultra Dock - DK1523

ThinkPad USB 3.0 Pro Dock - DK1522

This equipment has been tested and found to comply with the limits for a Class B digital device, pursuant to Part 15 of the FCC Rules. These limits are designed to provide reasonable protection against harmful interference in a residential installation. This equipment generates, uses, and can radiate radio frequency energy and, if not installed and used in accordance with the instructions, may cause harmful interference to radio communications. However, there is no guarantee that interference will not occur in a particular installation. If this equipment does cause harmful interference to radio or television reception, which can be determined by turning the equipment off and on, the user is encouraged to try to correct the interference by one or more of the following measures:

- Reorient or relocate the receiving antenna.
- Increase the separation between the equipment and receiver.
- Connect the equipment into an outlet on a circuit different from that to which the receiver is connected.
- Consult an authorized dealer or service representative for help.

Lenovo is not responsible for any radio or television interference caused by using other than specified or recommended cables and connectors or by unauthorized changes or modifications to this equipment. Unauthorized changes or modifications could void the user's authority to operate the equipment.

This device complies with Part 15 of the FCC Rules. Operation is subject to the following two conditions: (1) this device may not cause harmful interference, and (2) this device must accept any interference received, including interference that may cause undesired operation.

Responsible Party:
Lenovo (United States) Incorporated
1009 Think Place - Building One
Morrisville, NC 27560
Phone Number: 919-294-5900

Industry Canada Compliance Statement

CAN ICES-3(B)/NMB-3(B)

European Union - Compliance to the Electromagnetic Compatibility Directive

This product is in conformity with the protection requirements of EU Council Directive 2004/108/EC on the approximation of the laws of the Member States relating to electromagnetic compatibility. Lenovo cannot accept responsibility for any failure to satisfy the protection requirements resulting from a non-recommended modification of the product, including the installation of option cards from other manufacturers.

© Copyright Lenovo 2015

This product has been tested and found to comply with the limits for Class B Information Technology Equipment according to European Standard EN 55022. The limits for Class B equipment were derived for typical residential environments to provide reasonable protection against interference with licensed communication devices.

Lenovo, Einsteinova 21, 851 01 Bratislava, Slovakia

CE

German Class B compliance statement

Deutschsprachiger EU Hinweis:

Hinweis für Geräte der Klasse B EU-Richtlinie zur Elektromagnetischen Verträglichkeit
Dieses Produkt entspricht den Schutzanforderungen der EU-Richtlinie 2004/108/EG (früher 89/336/EWG) zur Angleichung der Rechtsvorschriften über die elektromagnetische Verträglichkeit in den EU-Mitgliedsstaaten und hält die Grenzwerte der EN 55022 Klasse B ein.

Um dieses sicherzustellen, sind die Geräte wie in den Handbüchern beschrieben zu installieren und zu betreiben. Des Weiteren dürfen auch nur von der Lenovo empfohlene Kabel angeschlossen werden. Lenovo übernimmt keine Verantwortung für die Einhaltung der Schutzanforderungen, wenn das Produkt ohne Zustimmung der Lenovo verändert bzw. wenn Erweiterungskomponenten von Fremdherstellern ohne Empfehlung der Lenovo gesteckt/eingebaut werden.

Deutschland:

Einhaltung des Gesetzes über die elektromagnetische Verträglichkeit von Betriebsmitteln
Dieses Produkt entspricht dem „Gesetz über die elektromagnetische Verträglichkeit von Betriebsmitteln“ EMVG (früher „Gesetz über die elektromagnetische Verträglichkeit von Geräten“). Dies ist die Umsetzung der EU-Richtlinie 2004/108/EG (früher 89/336/EWG) in der Bundesrepublik Deutschland.

Zulassungsbescheinigung laut dem Deutschen Gesetz über die elektromagnetische Verträglichkeit von Betriebsmitteln, EMVG vom 20. Juli 2007 (früher Gesetz über die elektromagnetische Verträglichkeit von Geräten), bzw. der EMV EG Richtlinie 2004/108/EC (früher 89/336/EWG), für Geräte der Klasse B.

Dieses Gerät ist berechtigt, in Übereinstimmung mit dem Deutschen EMVG das EG-Konformitätszeichen - CE - zu führen. Verantwortlich für die Konformitätserklärung nach Paragraf 5 des EMVG ist die Lenovo (Deutschland) GmbH, Gropiusplatz 10, D-70563 Stuttgart.

Informationen in Hinsicht EMVG Paragraf 4 Abs. (1) 4:
Das Gerät erfüllt die Schutzanforderungen nach EN 55024 und EN 55022 Klasse B.

Korea Class B compliance statement

B급 기기(가정용 방송통신기자재)
이 기기는 가정용(B급) 전자파적합기기로서 주로 가정에서 사용하는 것을 목적으로 하며, 모든 지역에서 사용할 수 있습니다

Japan VCCI Class B compliance statement

この装置は，クラスB情報技術装置です。 この装置は，家庭環境で使用することを目的としていますが，この装置がラジオやテレビジョン受信機に近接して使用されると，受信障害を引き起こすことがあります。
取扱説明書に従って正しい取り扱いをして下さい。 VCCI-B

Japan compliance statement for products which connect to the power mains with rated current less than or equal to 20 A per phase

日本の定格電流が 20A/相 以下の機器に対する高調波電流規制
高調波電流規格 JIS C 61000-3-2 適合品

Japan notice for ac power cord

The ac power cord shipped with your product can be used only for this specific product. Do not use the ac power cord for other devices.

本製品およびオプションに電源コード・セットが付属する場合は、
それぞれ専用のものになっていますので他の電気機器には使用し
ないでください。

Lenovo product service information for Taiwan

台灣 Lenovo 產品服務資訊如下:
荷蘭商聯想股份有限公司台灣分公司
台北市內湖區堤頂大道二段89號5樓
服務電話：0800-000-702

Ukraine compliance mark



Eurasian compliance mark



Appendix D. Notices

Lenovo may not offer the products, services, or features discussed in this document in all countries. Consult your local Lenovo representative for information on the products and services currently available in your area. Any reference to a Lenovo product, program, or service is not intended to state or imply that only that Lenovo product, program, or service may be used. Any functionally equivalent product, program, or service that does not infringe any Lenovo intellectual property right may be used instead. However, it is the user's responsibility to evaluate and verify the operation of any other product, program, or service.

Lenovo may have patents or pending patent applications covering subject matter described in this document. The furnishing of this document does not give you any license to these patents. You can send license inquiries, in writing, to:

Lenovo (United States), Inc.
1009 Think Place - Building One
Morrisville, NC 27560
U.S.A.
Attention: Lenovo Director of Licensing

LENOVO PROVIDES THIS PUBLICATION “AS IS” WITHOUT WARRANTY OF ANY KIND, EITHER EXPRESS OR IMPLIED, INCLUDING, BUT NOT LIMITED TO, THE IMPLIED WARRANTIES OF NON-INFRINGEMENT, MERCHANTABILITY OR FITNESS FOR A PARTICULAR PURPOSE. Some jurisdictions do not allow disclaimer of express or implied warranties in certain transactions, therefore, this statement may not apply to you.

This information could include technical inaccuracies or typographical errors. Changes are periodically made to the information herein; these changes will be incorporated in new editions of the publication. Lenovo may make improvements and/or changes in the product(s) and/or the program(s) described in this publication at any time without notice.

Recycling information

Lenovo encourages owners of information technology (IT) equipment to responsibly recycle their equipment when it is no longer needed. Lenovo offers a variety of programs and services to assist equipment owners in recycling their IT products. For information on recycling Lenovo products, go to:
http://www.lenovo.com/recycling

Recycling and disposal information for Japan is available at:
http://www.lenovo.com/recycling/japan

Recycling information for China

《废弃电器电子产品回收处理管理条例》提示性说明

联想鼓励拥有联想品牌产品的用户当不再需要此类产品时，遵守国家废弃电器电子产品回收处理相关法律法规，将其交给当地具有国家认可的回收处理资质的厂商进行回收处理。更多回收服务信息，请点击进入
http://support.lenovo.com.cn/activity/551.htm

© Copyright Lenovo 2015

Recycling information for Brazil

Declarações de Reciclagem no Brasil

Descarte de um Produto Lenovo Fora de Uso

Equipamentos elétricos e eletrônicos não devem ser descartados em lixo comum, mas enviados à pontos de coleta, autorizados pelo fabricante do produto para que sejam encaminhados e processados por empresas especializadas no manuseio de resíduos industriais, devidamente certificadas pelos orgãos ambientais, de acordo com a legislação local.

A Lenovo possui um canal específico para auxiliá-lo no descarte desses produtos. Caso você possua um produto Lenovo em situação de descarte, ligue para o nosso SAC ou encaminhe um e-mail para: reciclar@lenovo.com, informando o modelo, número de série e cidade, a fim de enviarmos as instruções para o correto descarte do seu produto Lenovo.

Important WEEE information

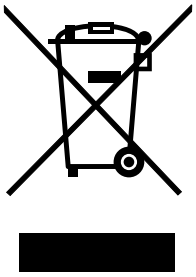

The WEEE marking on Lenovo products applies to countries with WEEE and e-waste regulations (for example, the European WEEE Directive, India E-Waste Management & Handling Rules, 2011). Appliances are labeled in accordance with local regulations concerning waste electrical and electronic equipment (WEEE). These regulations determine the framework for the return and recycling of used appliances as applicable within each geography. This label is applied to various products to indicate that the product is not to be thrown away, but rather put in the established collection systems for reclaiming these end of life products.

Users of electrical and electronic equipment (EEE) with the WEEE marking must not dispose of end of life EEE as unsorted municipal waste, but use the collection framework available to them for the return, recycle, and recovery of WEEE and to minimize any potential effects of EEE on the environment and human health due to the presence of hazardous substances. For additional WEEE information go to: http://www.lenovo.com/recycling

Export Classification Notice

This product is subject to the United States Export Administration regulations (EAR) and has an Export Classification Control Number (ECCN) of EAR99. It can be re-exported except to any of the embargoed countries in the EAR E1 country list.

Trademarks

The following terms are trademarks of Lenovo in the United States, other countries, or both:

Lenovo

The Lenovo logo

ThinkPad

ThinkVantage

ThinkCentre

Microsoft and Windows are trademarks of the Microsoft group of companies.

Intel is a trademark of Intel Corporation in the United States, other countries, or both.

AMD is a registered trademark of Advanced Micro Devices, Inc.

The terms HDMI and HDMI High-Definition Multimedia Interface are trademarks or registered trademarks of HDMI Licensing LLC in the United States and other countries.

DisplayPort and VESA are trademarks of the Video Electronics Standards Association.

Other company, product, or service names may be trademarks or service marks of others.

Appendix E. Restriction of Hazardous Substances Directive (RoHS)

European Union RoHS

Lenovo products sold in the European Union, on or after 3 January 2013 meet the requirements of Directive 2011/65/EU on the restriction of the use of certain hazardous substances in electrical and electronic equipment (“RoHS recast” or “RoHS 2”).

For more information about Lenovo progress on RoHS, go to:
http://www.lenovo.com/social_responsibility/us/en/RoHS_Communication.pdf

China RoHS

为满足中国电子电气产品有害物质限制相关的法律法规和其他要求，联想公司对本产品中有害物质，按部件分类，声明如下。

部件名称	有害物质					
	铅（Pb）	汞（Hg）	镉（Cd）	六价铬（Cr（VI））	多溴联苯（PBB）	多溴二苯醚（PBDE）
印刷电路板组件*	X	O	O	O	O	O
外壳及附件	X	O	O	O	O	O

本表格依据SJ/T 11364的规定编制。
O：表示该有害物质在该部件所有均质材料中的含量均在GB/T 26572规定的限量要求以下。
×：表示该有害物质至少在该部件的某一均质材料中的含量超出GB/T 26572规定的限量要求。
表中标记“×”的部件，皆因全球技术发展水平限制而无法实现有害物质的替代。

印刷电路板组件*：包括印刷电路板及其零部件，电子元器件等

根据产品型号不同，您所购买的产品可能不会含有以上所有部件

在中华人民共和国境内销售的电子电气产品上将印有“环保使用期”（EPuP）符号。圆圈中的数字代表产品的正常环保使用年限。

Turkish RoHS

The Lenovo product meets the requirements of the Republic of Turkey Directive on the Restriction of the Use of Certain Hazardous Substances in Waste Electrical and Electronic Equipment (WEEE).

Türkiye AEEE Yönetmeliğine Uygunluk Beyanı

Bu Lenovo ürünü, T.C. Çevre ve Orman Bakanlığı'nın “Atık Elektrik ve Elektronik Eşyalarda Bazı Zararlı Maddelerin Kullanımının Sınırlandırılmasına Dair Yönetmelik (AEEE)” direktiflerine uygundur.

AEEE Yönetmeliğine Uygundur.

Ukraine RoHS

Цим підтверджуємо, що продукція Леново відповідає вимогам нормативних актів України, які обмежують вміст небезпечних речовин

© Copyright Lenovo 2015

India RoHS

RoHS compliant as per E-Waste (Management & Handling) Rules, 2011.



Part Number: SP40H10911

Printed in China

(1P) P/N: SP40H10911

